INSTALLATION & USER'S GUIDE

CoreManual
and
CoreManual withTorqDrive

for Beta Motorcycles

Doc ID: 191-7106A
Revision: 040919

©2017 Rekluse Motor Sports
Rekluse Motor Sports, Inc.
customerservice@rekluse.com

Table of Contents

OVERVIEW 2
INSTALLATION TIPS 3
TOOLS 4
INCLUDED PARTS 4
CORE MANUAL 4
CORE MANUAL TORQDRIVE 5
DISASSEMBLE CLUTCH 6
INSTALL THE HUB 11
INSTALL THE CLUTCH PACK 13
Notes for installation 13
CoreManual kit 14
CoreManual TorqDrive kit 15
Pressure Plate Spring Information 18
INSTALL THE CLUTCH COVER 19
MAINTENANCE 19
Disk inspection examples 20
TROUBLESHOOTING 21
Performance issues 21
Clutch noise 23
NEED ADDITIONAL HELP? 24

OVERVIEW

This install manual is for both CoreManual and CoreManual with TorqDrive clutch kits.

This kit replaces many of the OE (Original Equipment) or “stock” clutch parts.

- The Core Manual kit will replace the OE drive plates with Rekluse steel drive plates.
- The CoreManual with TorqDrive kit will replace all the OE frictions and drive plates with a Rekluse thin friction clutch pack.

- Both kits replace the OE pressure plate springs with high quality Rekluse springs.
- Both kits replace the OE center clutch hub and pressure plate components with Rekluse Core components.
- The OE basket can be re-used if tangs and dampers are in good condition.

INSTALLATION TIPS

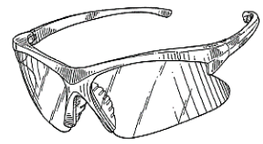

- Read the separate included Safety Information document before operating the vehicle with the product installed.
- Read this entire document before performing any steps.
- If you install this product for a customer or another person, instruct them to read the **Safety Information** document and the **Installation and User Guide** before operating the bike with the product.
- Protect eyes and skin – wear safety glasses and work gloves.
- Lay the motorcycle on its left side when replacing the clutch. This makes the clutch work easier and eliminates the need to drain the oil. Catch any fuel that may drain from the bike.
- Use the torque values listed in the instructions. Otherwise, use the torque specifications found in your OE service manual.
- For optimal clutch performance Rekluse recommends using fresh, clean oil that meets JASO-MA oil rating requirements. Rekluse offers Factory Formulated Oil™ developed specifically for Rekluse products. Rekluse Factory Formulated Oil is a perfect complement to any OEM or aftermarket wet clutch. Visit www.rekluse.com to learn more.

TOOLS

- Fluid Catch Container
- 10 mm socket
- 8 mm socket
- 27mm socket
- Metric Wrench
- Hammer
- Torque Wrench
- Pick
- Channel lock pliers
- 4 mm Hex key
- 5 mm Hex key

INCLUDED PARTS

CORE MANUAL

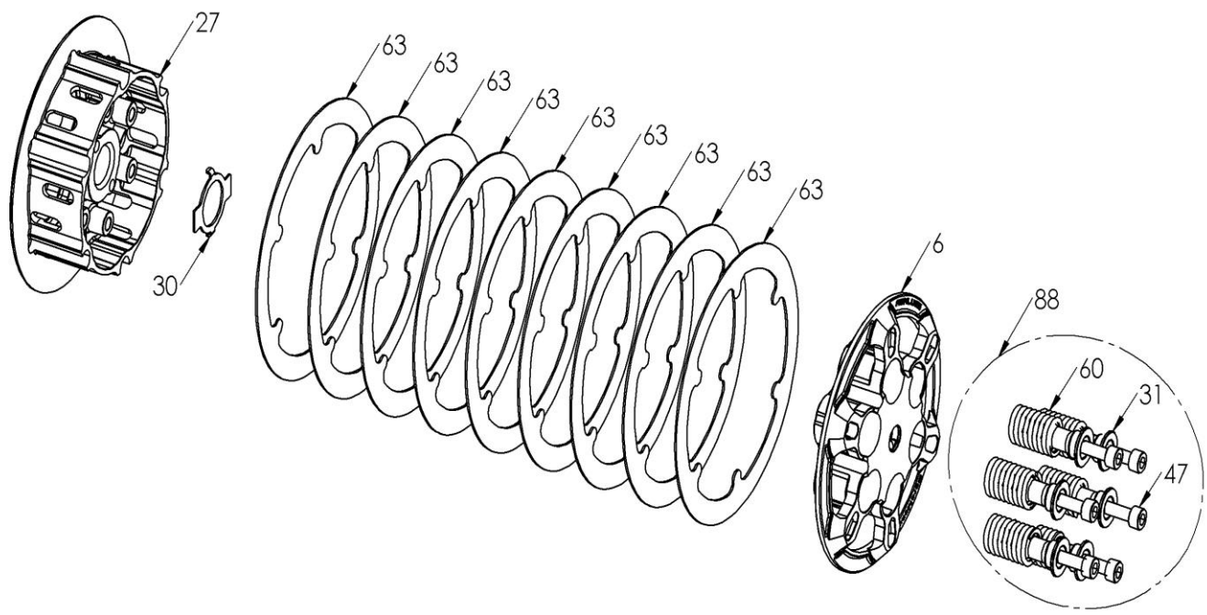

Item	Description	Qty.
6	Pressure plate	1
27	Center clutch hub	1
30	Tab lock washer	1
63	Steel drive plates	9
88	Clutch spring kit	1
60	Pressure plate springs –colors vary	6
31	Screw sleeves	6
47	Socket head cap screws	6

CORE MANUAL TORQDRIVE

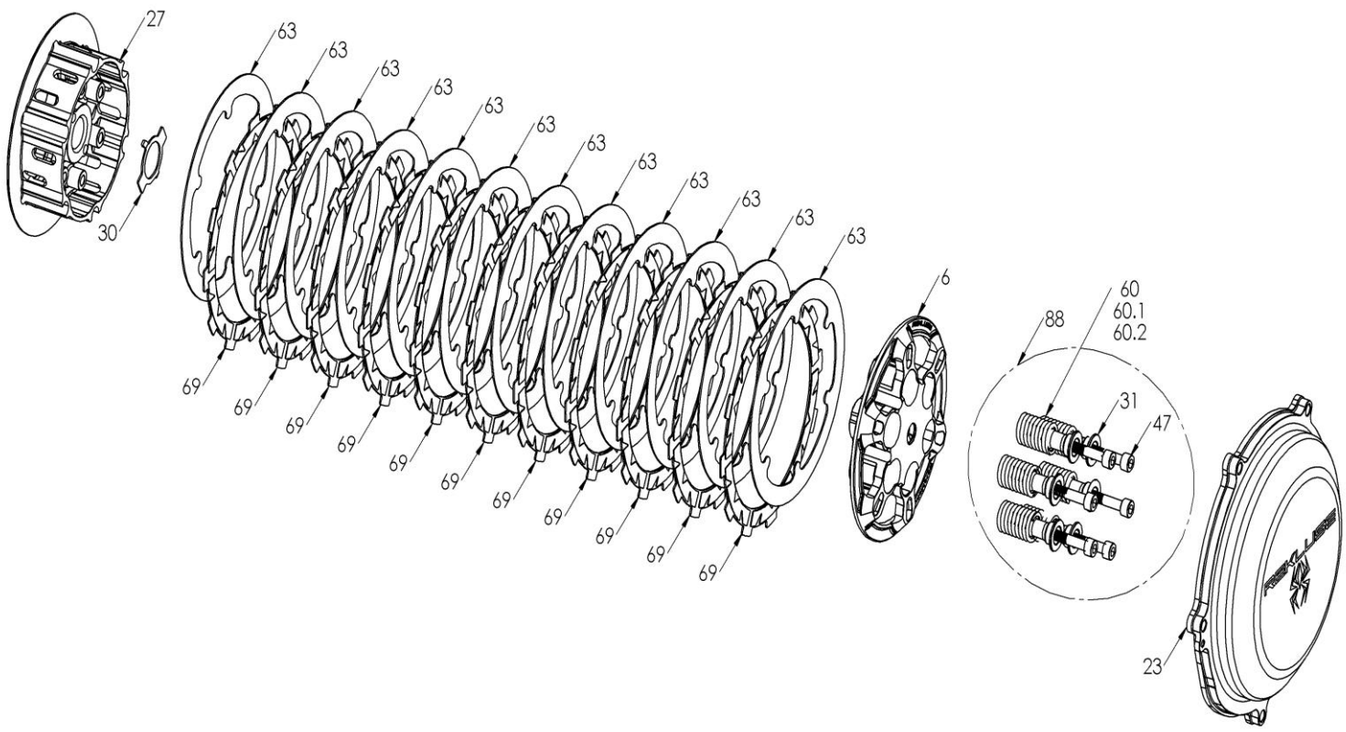

Item	Description	Qty.
6	Pressure plate	1
27	Center clutch hub	1
30	Tab lock washer	1
63	Steel drive plates	12
69	TorqDrive® friction disks	11
23	Clutch cover	1
88	Clutch spring kit	1
60 60.1 60.2	Pressure plate springs – numbers and colors vary	3,3,6
31	Screw sleeves	6
47	Socket head cap screws	6

Visit www.rekluse.com/support for
a full parts fiche illustration and part numbers.

DISASSEMBLE CLUTCH

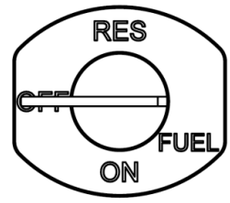

1. If your bike is carbureted, turn the fuel petcock to "OFF."
2. Shift the transmission into 5th gear.
3. Lay the bike on its left side. Catch any fuel that might drain in a suitable container.
4. Remove the break pedal spring from the clutch cover.

5. Using an 8 mm socket, remove the OE clutch cover. Pay close attention to the length and location of the OE screws so they can be returned to their same location.

Note: *Clean and set aside the OE cover gasket if OE equipped. The OE cover gasket will be reused.*

6. Using a hex key, remove the pressure plate bolts, sleeves, and springs, then remove the pressure plate.

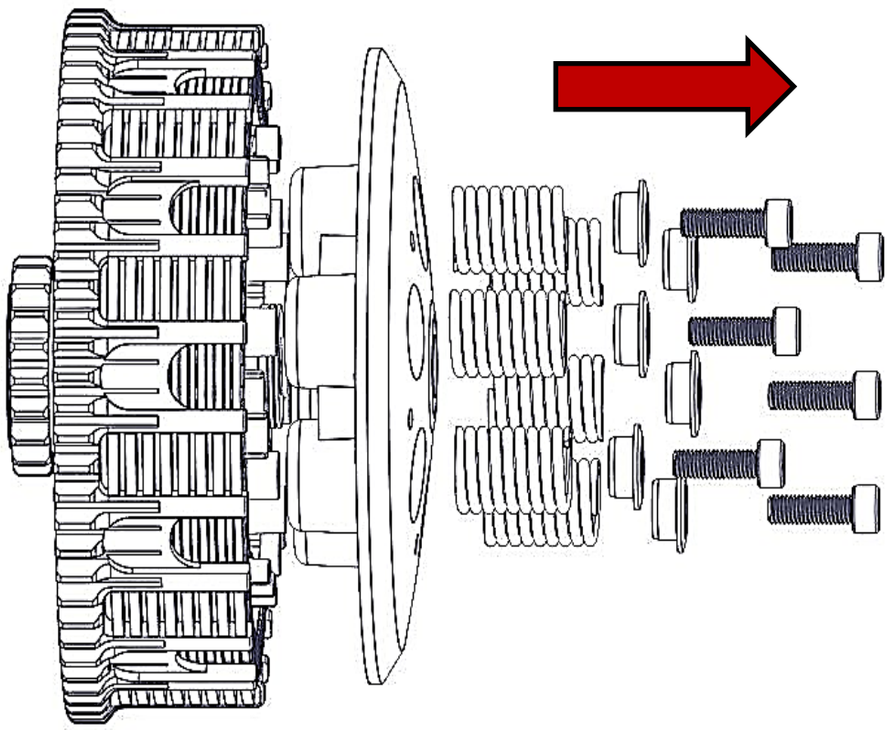

7. Remove the OE clutch pack, then set it aside. Use a pick if necessary to help remove the clutch pack.

- **<u>CoreManual:</u>**
  Separate the friction disks from the drive plates. The friction disks will be reused.

- **<u>CoreManual TorqDrive:</u>**
  Set the clutch pack aside. It will not be reused.

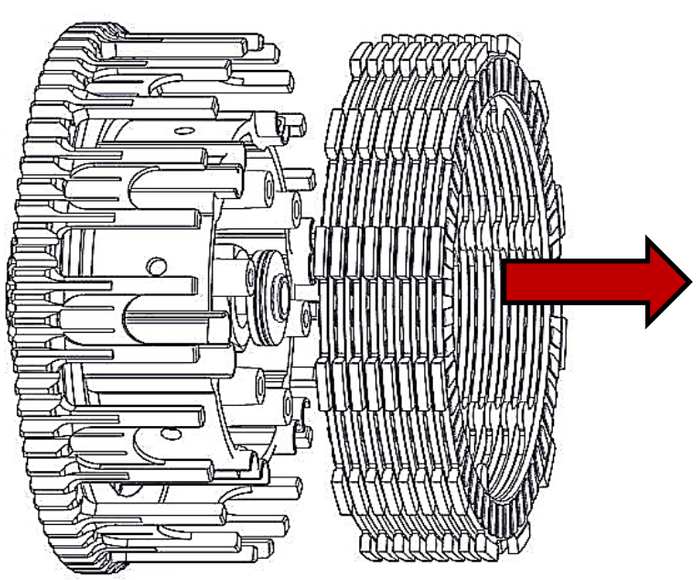

8. Remove the 6 drive pins. Set these aside. The drive pins will be reused.

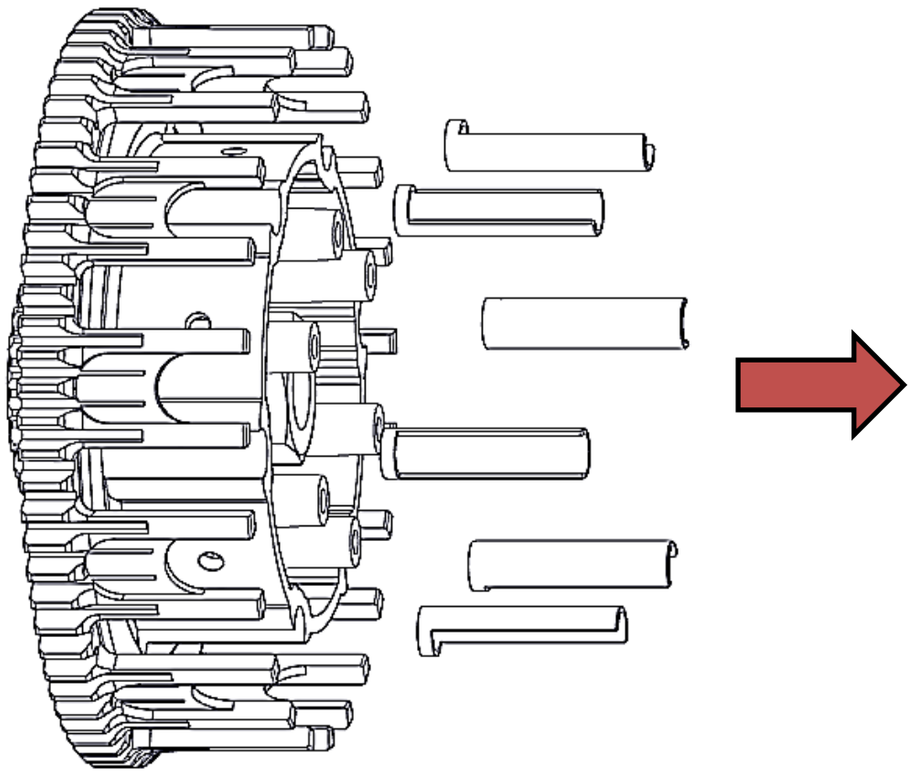

⚠CAUTION

Be careful the drive pins do not fall into the engine while disassembling.

9. Inspect the clutch basket for notching or wear. If the basket is notched or worn, replace the basket.

⚠WARNING

Failure to inspect the basket and replace if necessary could result in death, serious injury, and/or property damage.

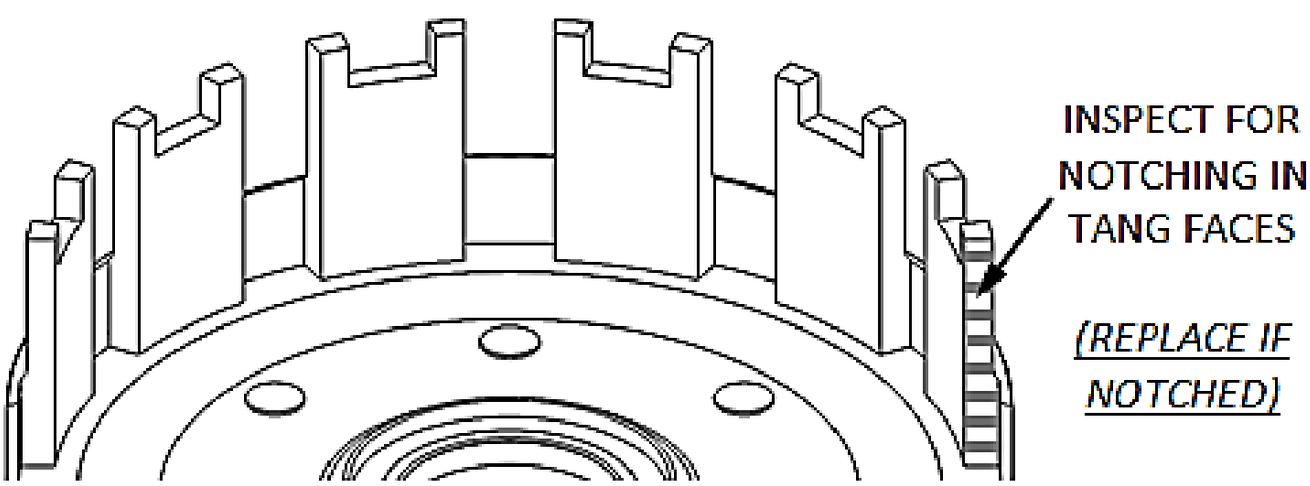

10. Remove the throw-out assembly and set it aside. This assembly will be reused.

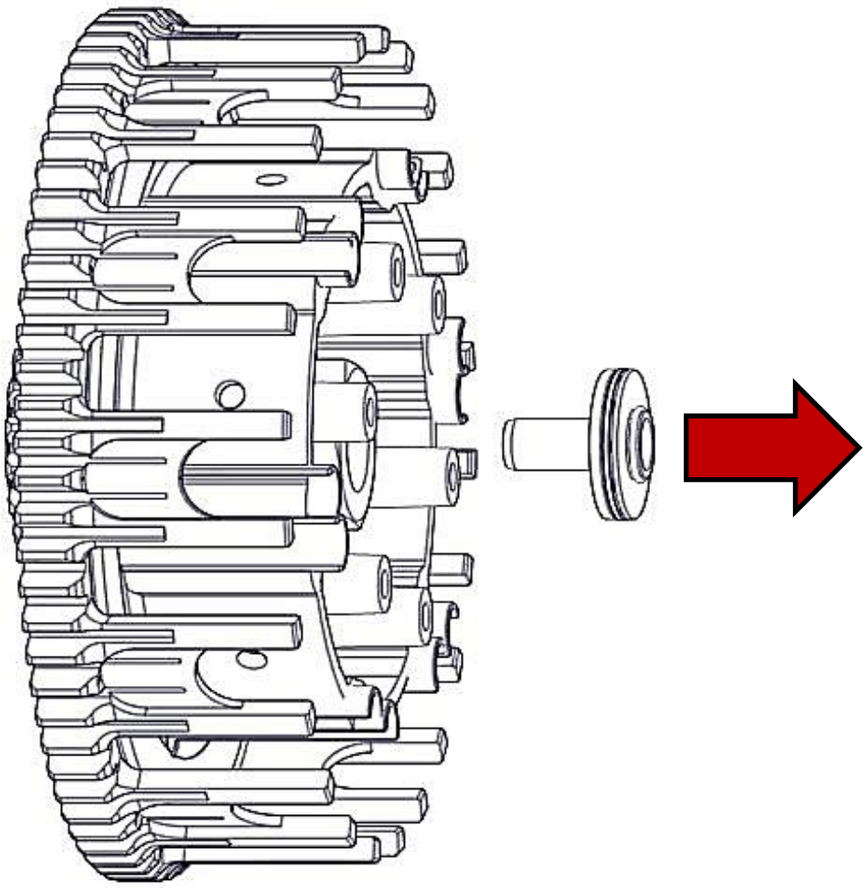

11. Use a hammer and large screwdriver to bend down the edges of the washer tab until it clears the clutch nut.

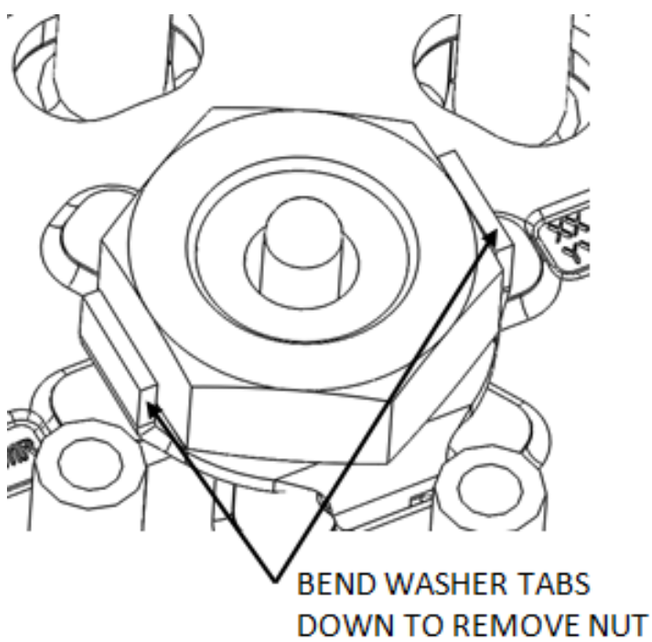

12. Remove the center clutch nut with an impact wrench or breaker bar, and socket. Set aside. The OE clutch nut will be reused.

Note: *Placing the bike in the highest gear and holding the rear wheel by applying the rear brake keeps the shaft from rotating when removing the nut.*

13. Remove the washer located under the center clutch nut. The OE washer will be replaced with a Rekluse tab lock washer.

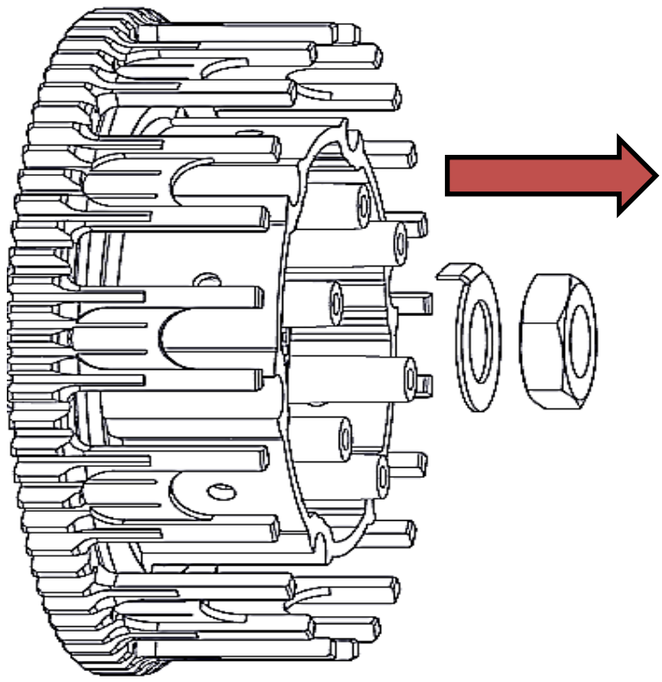

14. Remove the center hub from the clutch basket while leaving the thrust washer underneath on the main shaft.

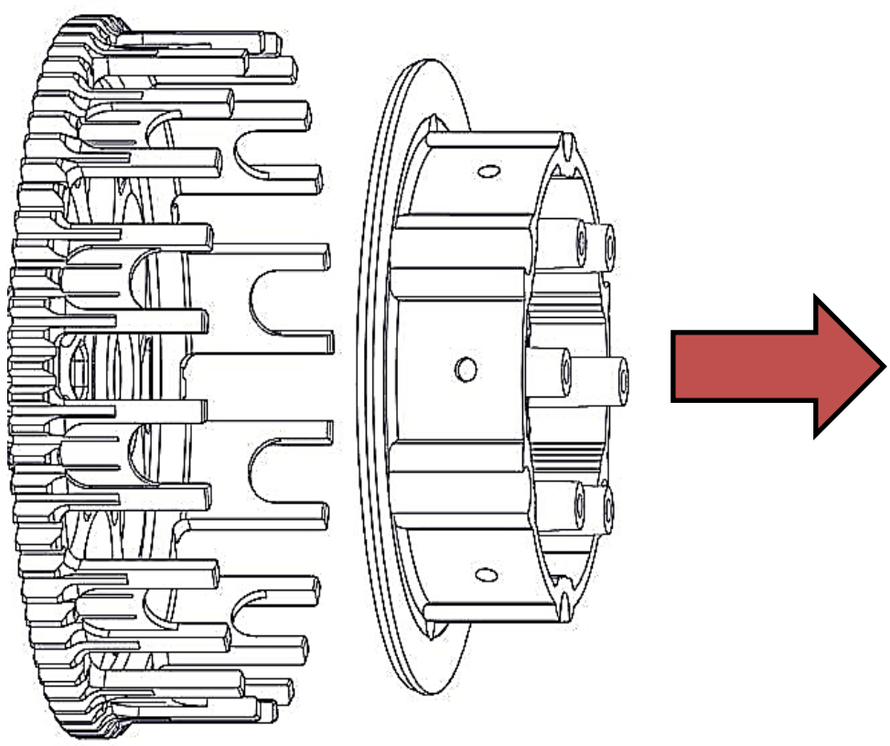

Note: *Check that the OE thrust washer is still on the main shaft and not stuck to the bottom of the center hub assembly. The thrust washer must be installed or clutch performance issues will result.*

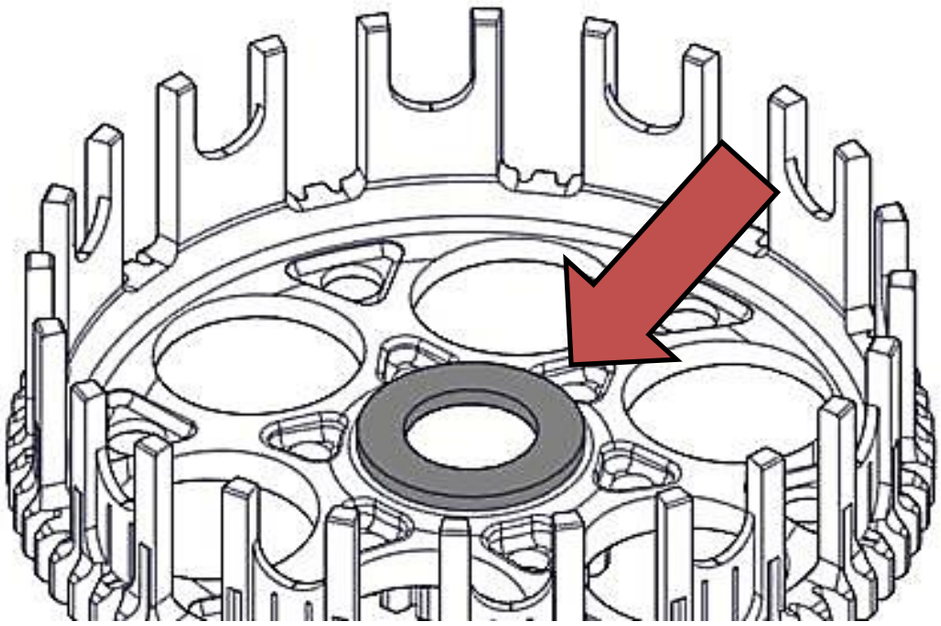

INSTALL THE HUB

1. Install the new Rekluse center hub into the clutch basket.

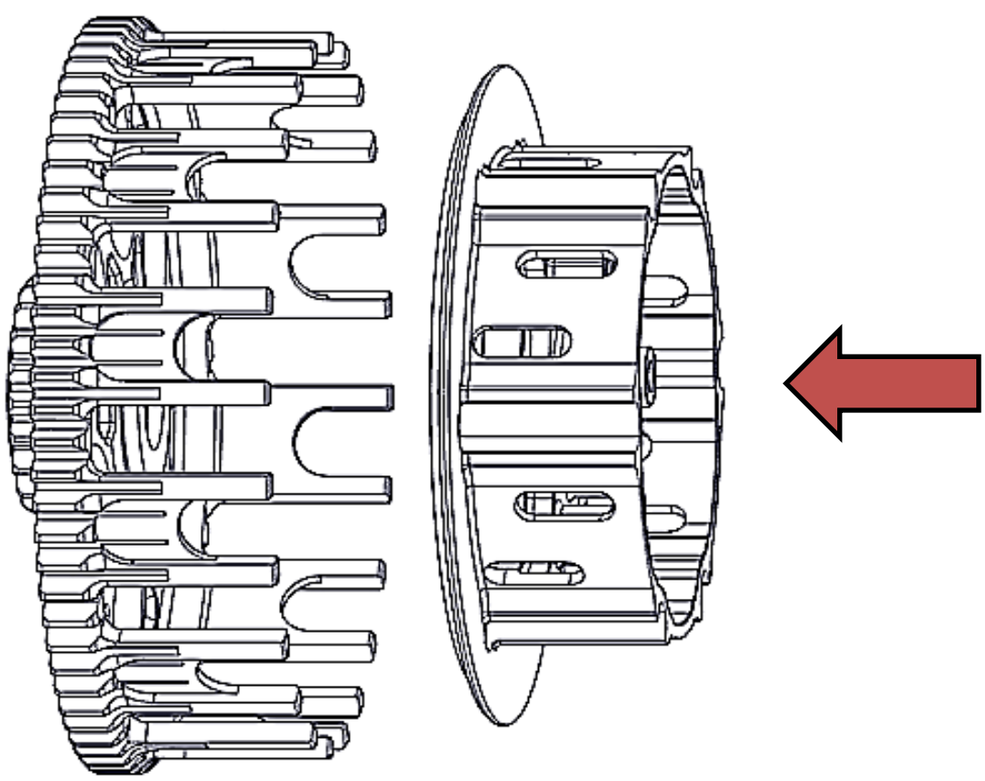

2. Install the new Rekluse tab washer with the bent tabs facing down, aligning with the holes in the hub.

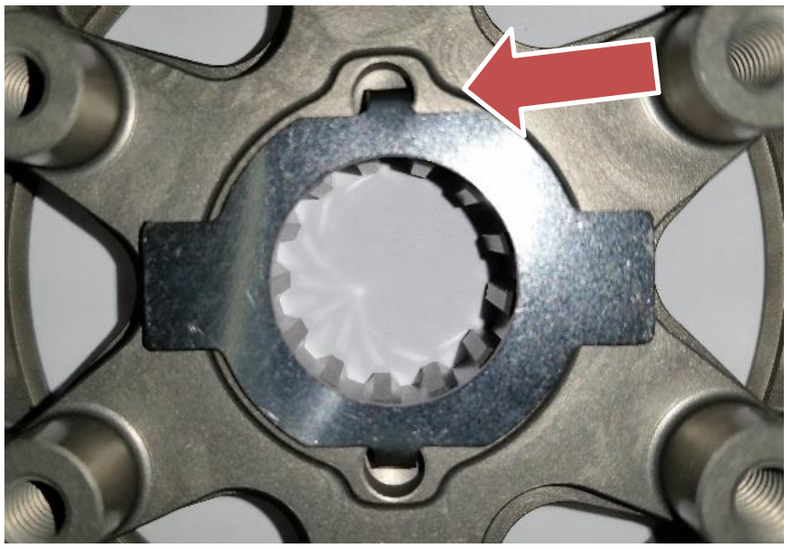

3. Reinstall the OE clutch nut.

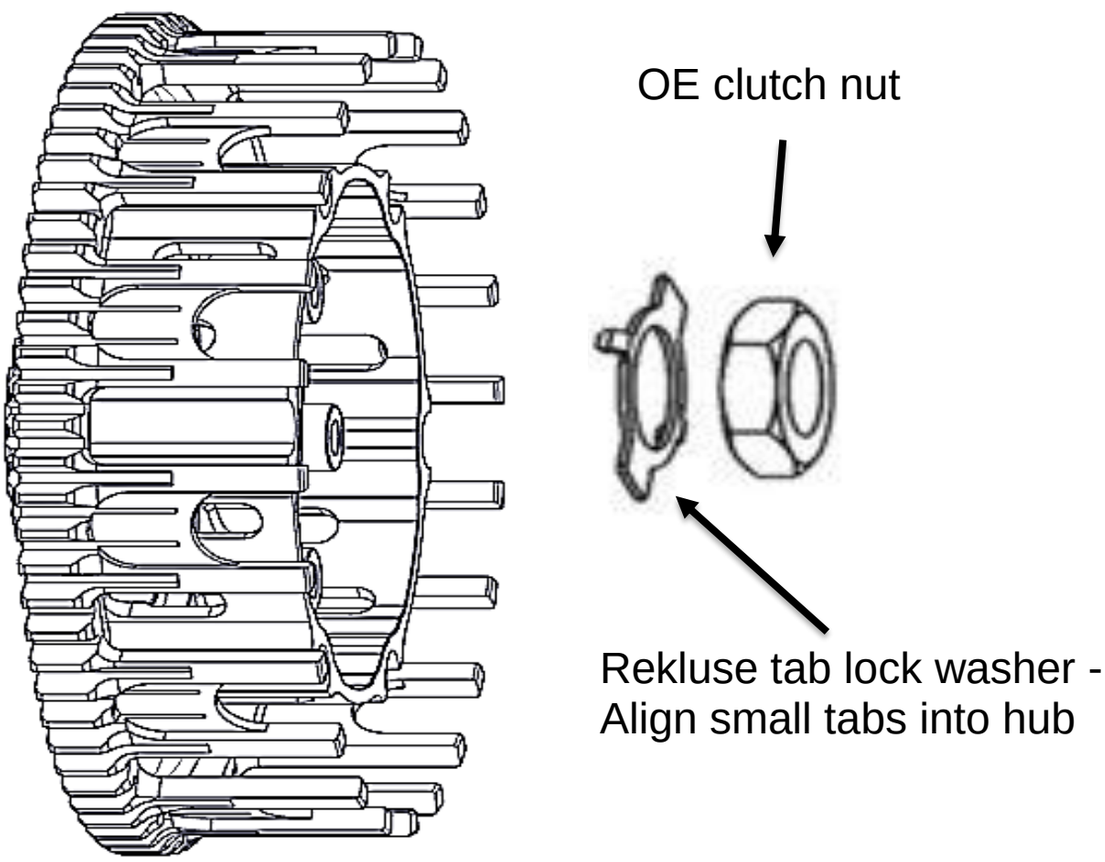

4. Using the socket and torque wrench, torque the center clutch nut to **50** ft-lb (**68** N-m).

5. Using the channel-lock pliers, bend up **both** tabs of the tab washer tightly around the nut. The tabs can be bent on the straight sides or around the corners.

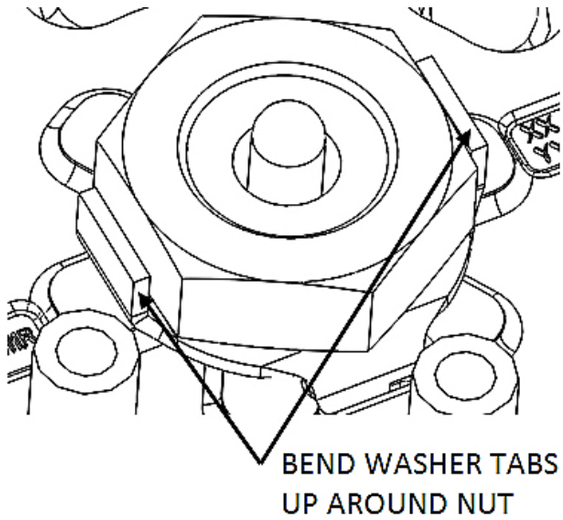

INSTALL THE CLUTCH PACK

Notes for installation

- *Some friction disks are marked with a small colored dot. This mark is used for processing and can be ignored.*

- *OE baskets have "half slots" at the top of the basket tangs. Rekluse products require that all friction disks' tabs are installed into the MAIN (deeper) basket slots. Do not use the "half-slots."*

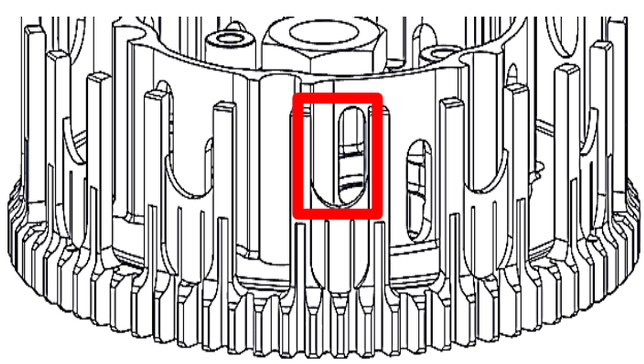

1. If your kit comes with friction disks, soak them in new engine oil for 5 minutes. Make sure the friction disks are coated in oil on both sides.

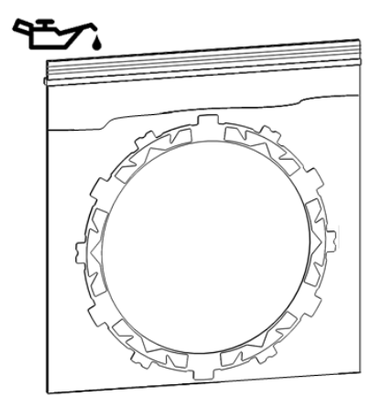

2. Install the 6 OE drive pins onto the Rekluse center hub, in the cut pin channels.

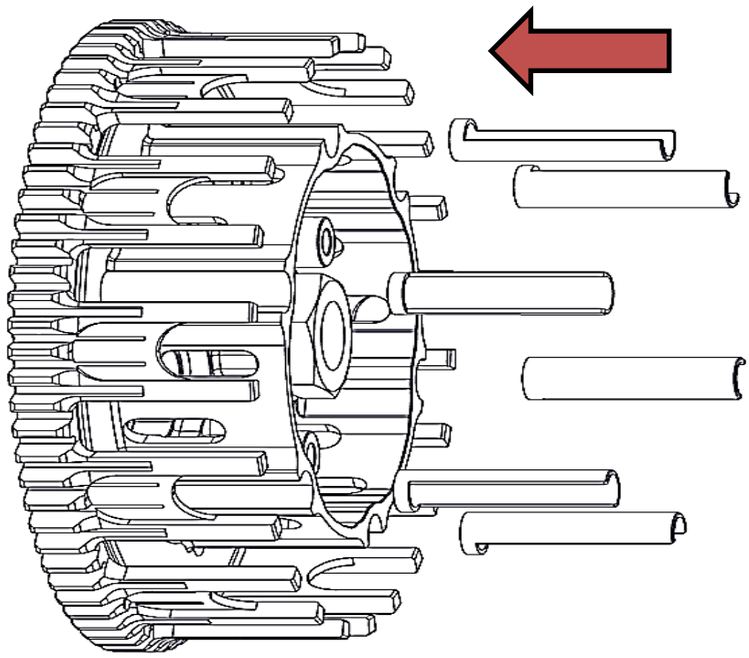

3. The clutch pack is installed based on the type of clutch kit. Follow the clutch pack directions based on your kit, then continue with step 4.

CoreManual kit:

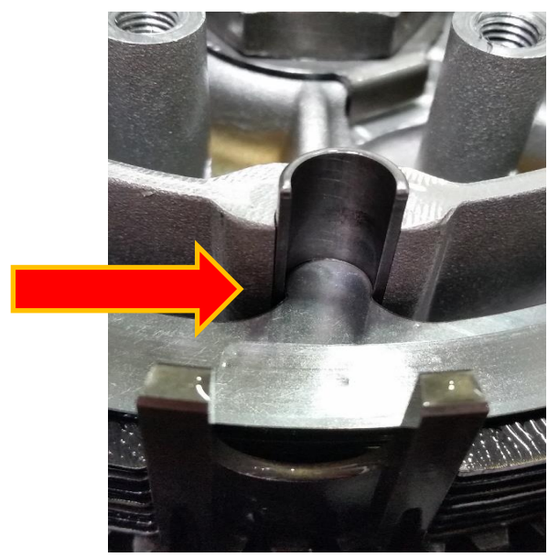

a. Install a Rekluse steel drive plate by aligning the drive plate tabs into the drive pin slots on the hub, then install an OE friction disk.

b. Continue to alternate the remaining Rekluse steel drive plates with the remaining OE friction disks for the entire clutch pack, ending with a steel drive plate on top.

Core Manual Clutch Pack

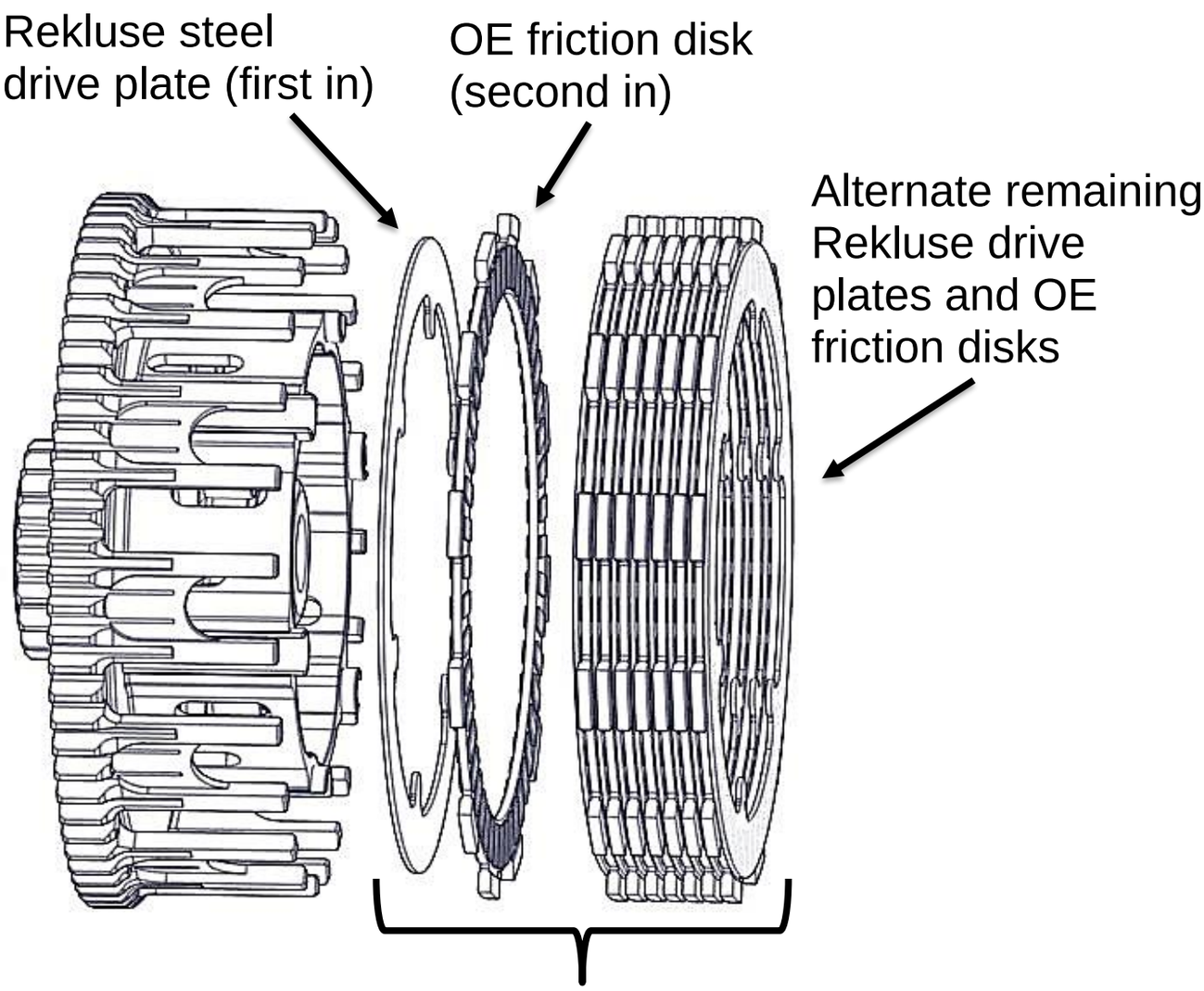

Total clutch pack:
9 Rekluse steel drive plates and 8 OE frictions

CoreManual TorqDrive kit:

a. Install a Rekluse steel drive plate by aligning the drive plate tabs into the drive pin slots on the hub, then install a Rekluse friction disk.

b. Continue to alternate the remaining Rekluse steel drive plates with the remaining Rekluse friction disks for the entire clutch pack, ending with a steel drive plate on top.

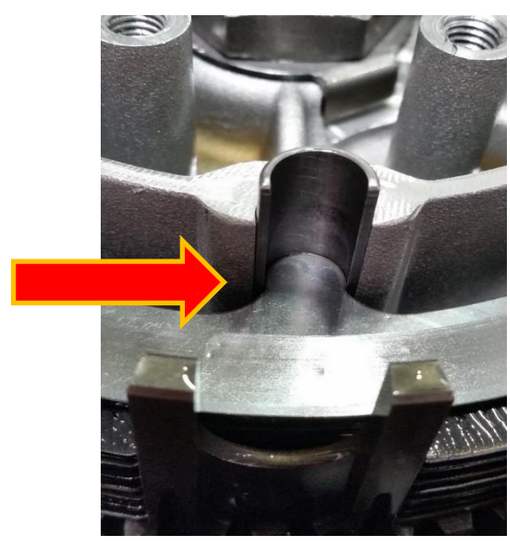

CoreManual TorqDrive Clutch Pack

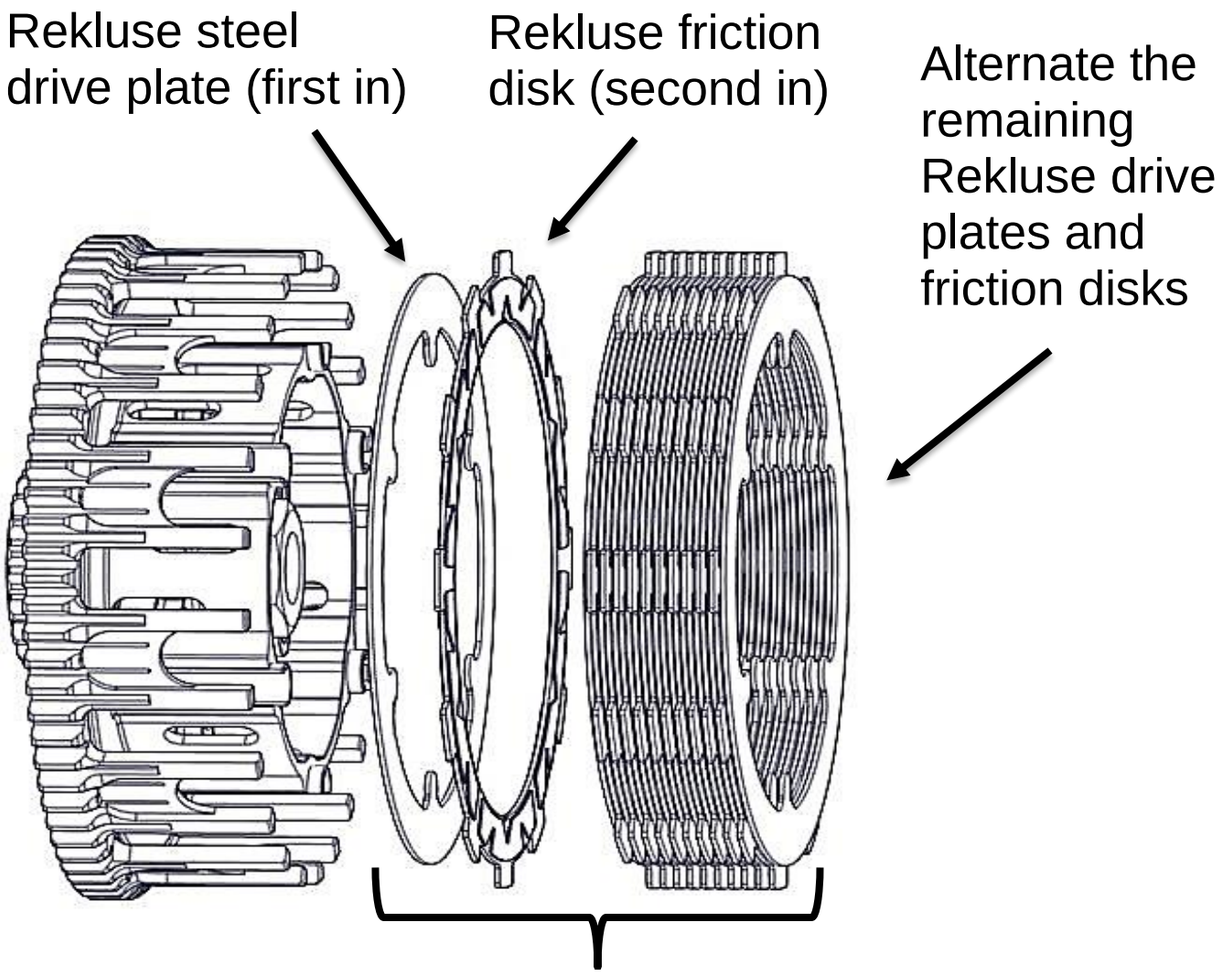

Total clutch pack:
12 steel drive plates and 11 friction disks

Both kits:

4. Reinstall the OE throw-out assembly.

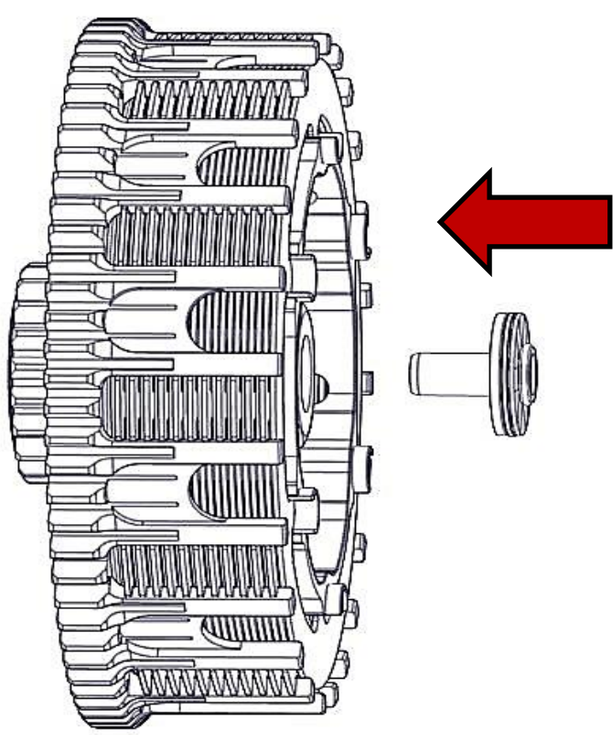

5. Install the pressure plate onto the clutch pack.

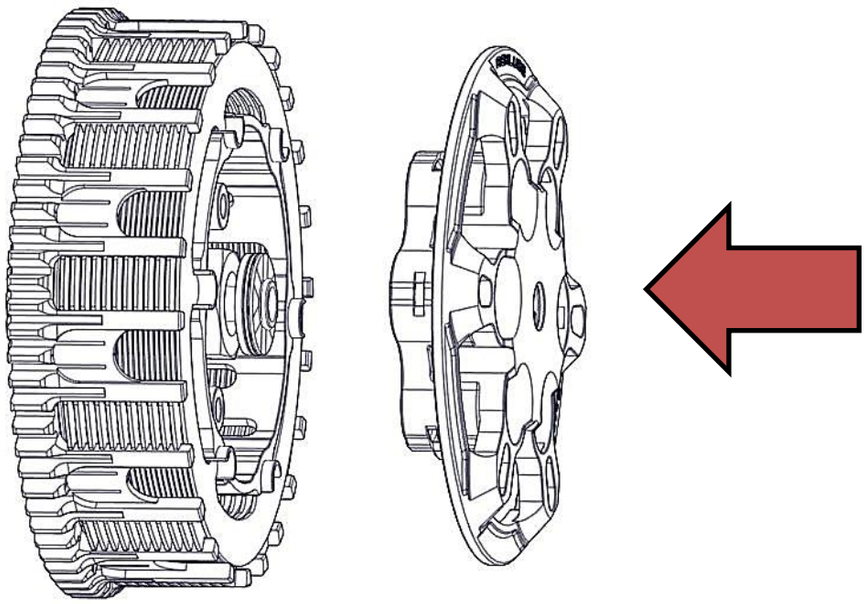

6. Install the new Rekluse pressure plate springs, then insert the Rekluse screw sleeves and pressure plate bolts.

Note: *Be sure to alternate springs if you are using two different color springs to keep even pressure on the clutch. See following section for pressure plate spring options.*

⚠CAUTION

Do not reuse the OE springs or bolts. They are not compatible with the Rekluse core parts.

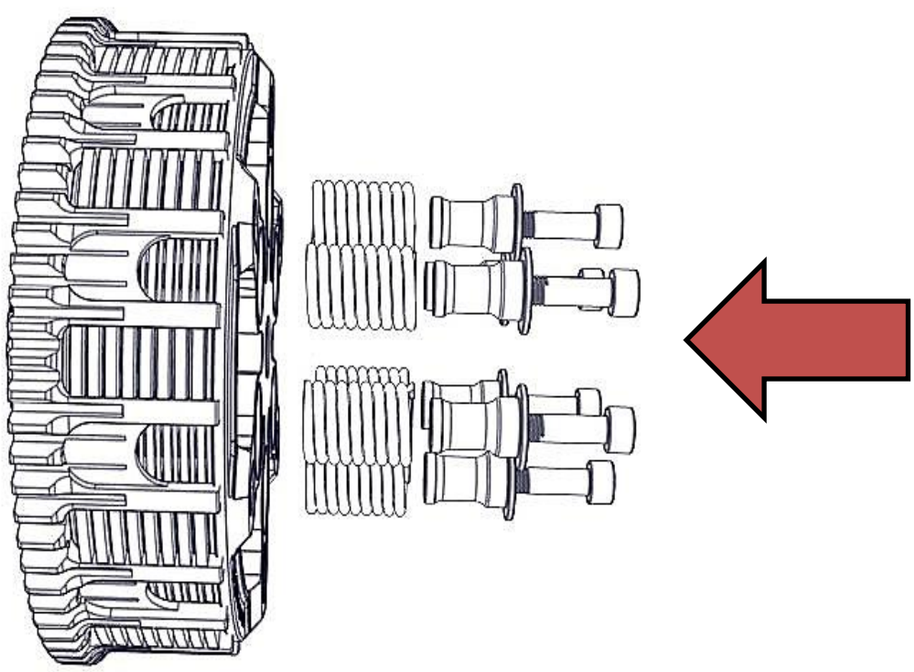

Pressure Plate Spring Information

Do not use higher force pressure plate springs than those included in the kit. Charts are representative. Differences in clamping force and torque capacity will vary by model.

CoreManual: This kit ships with 6 red springs, which is the recommended setting. Alternative springs can be purchased separately from Rekluse.

CoreManual TorqDrive: There are three spring options in your kit.

- Silver springs provide torque transfer similar to the stock clutch, but with a very light clutch lever.
- Gold springs will give the feel of a smoother clutch with a clutch lever pull lighter than stock.
- Red springs will yield a more aggressive clutch with clutch pull similar to stock.
- Using three of each spring (3 silver / 3 red) will result in an in-between setup. Be sure to alternate springs when using a 3 and 3 combo of springs to keep even pressure on the clutch.
- Rekluse recommends installing 3 gold and 3 red springs for best performance and clutch life.

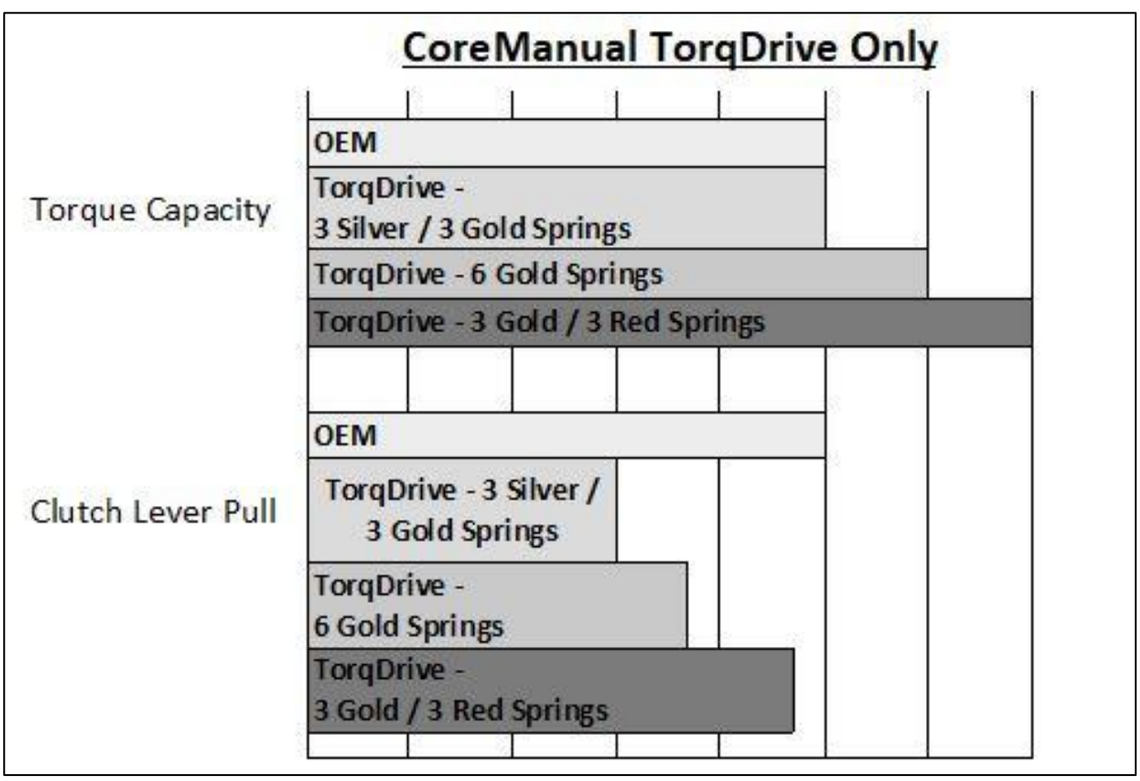

7. Using a torque wrench, tighten the pressure plate bolts to **9 ft-lb (12 N-m)**.

INSTALL THE CLUTCH COVER

Install the clutch cover according to the type of clutch kit.

- **CoreManual kit:**
  a. Check to make sure that the OE gasket is installed on the OE cover.
  b. Reinstall the OE cover onto the bike.
- **CoreManual TorqDrive kit:**
  a. Install the OE cover gasket, if equipped, onto the Rekluse clutch cover.
  b. Install the Rekluse cover onto the bike.

Both kits:

1. Reinstall the OE bolts, then lightly tighten the cover bolts in small increments in a star pattern. Be sure to return the bolts in the same location they were removed.

⚠CAUTION

Failure to install the OE clutch cover bolts back in their proper location can result in damage to your motorcycle.

2. Torque the cover bolts to 9 ft-lbs (12 N-m).
3. Reinstall the break pedal spring onto the clutch cover.

MAINTENANCE

To keep your clutch performing at its best, perform regular maintenance on your bike and clutch.

- Keep up with regular oil changes as per the bike manufacturer's recommendations. Clutch performance and longevity depend on oil quality. Oil recommendations can also be viewed under Tech Tips on our website at www.rekluse.com/support/videos/atv-mc-support-videos.

- Inspect all of your clutch parts for signs of wear or excessive heat, and replace components as necessary. Clutch wear is dependent on the riders use.

Maintenance Protocol	Maintenance Intervals
Inspect all clutch parts for excessive wear or heat. Replace as needed.	Refer to OE service manual
Change oil, inspect and clean oil screens	Refer to OE service manual

- Inspect the dampers, and replace them if you feel any movement between the two hubs. Refer to the section on inspecting the dampers for more information.
- Replace friction disks if the disks are glazed and/or burnt.
- Measuring the clutch pack can help determine if the components need replacing.
- Repeat the break-in procedure anytime you replace frictions disks. Always soak friction disks in oil for at least 5 minutes before installing.
- Replace the drive plates if they show signs of excessive heat.

Disk inspection examples

When inspecting the clutch pack, the following pictures can be used as a reference. **These are best viewed in color by viewing this install document on our website at www.rekluse.com/support.**

Drive Plates – If the clutch pack is getting high amounts of heat, purple, blue, or black color can be seen on the drive plate teeth. See pictures below. Not all drive plates look the same and may look different than pictured.

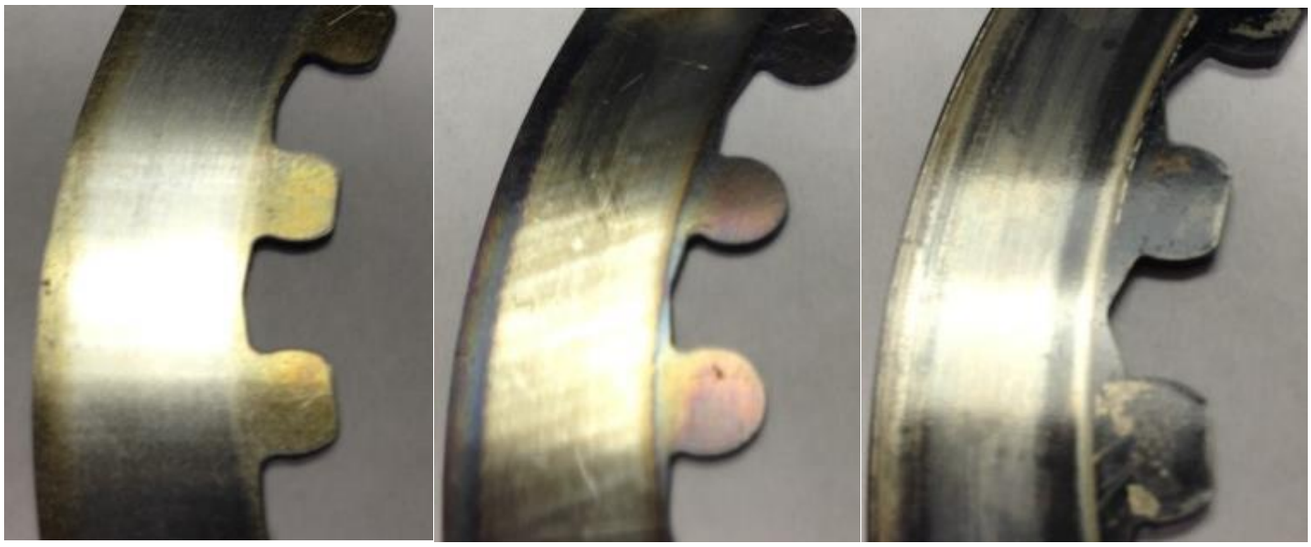

Normal Heat | High Heat (Blue) | Excessive Heat (Black)

Friction Disks – Due to the dark color of the friction material, the friction disks will appear almost black as soon as they are put in oil. During inspection, look for glazing of the friction material. Glazing will appear shiny and feel like glass, even after oil is cleaned from the friction disk. Not all friction disks look the same and may look different than pictured.

Normal Friction

Glazed Friction

TROUBLESHOOTING

Performance issues

If the clutch drags, the clutch disks might be worn. Excessive heat or clutch slip can cause premature clutch failure as well. Once extreme temperatures are reached, irreversible damage will occur.

- Inspect all of your clutch parts for signs of wear or excessive heat, and replace components as necessary. Clutch wear is dependent on the riders use.
- Measuring the clutch pack can help determine if the components need replacing.

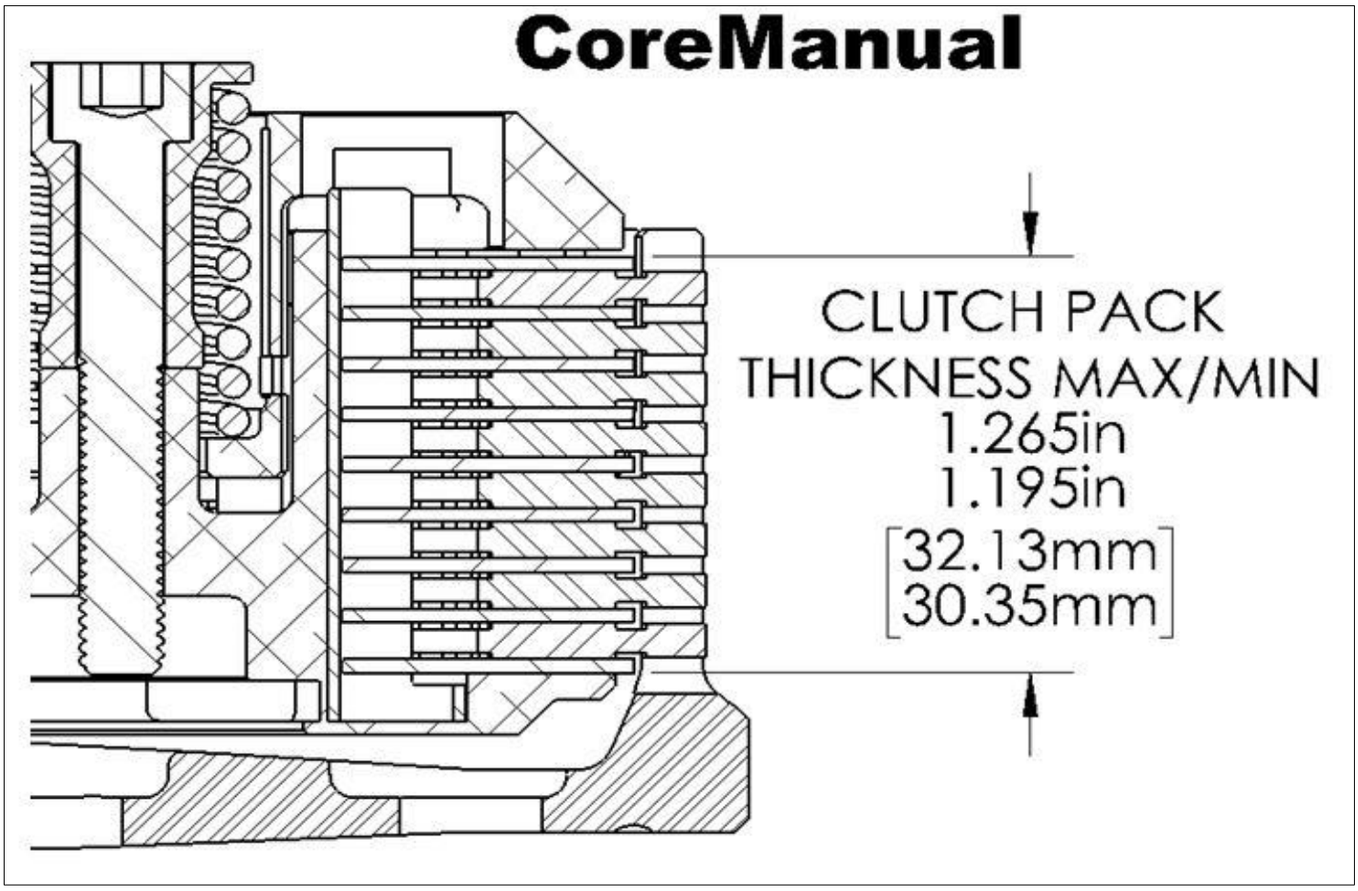

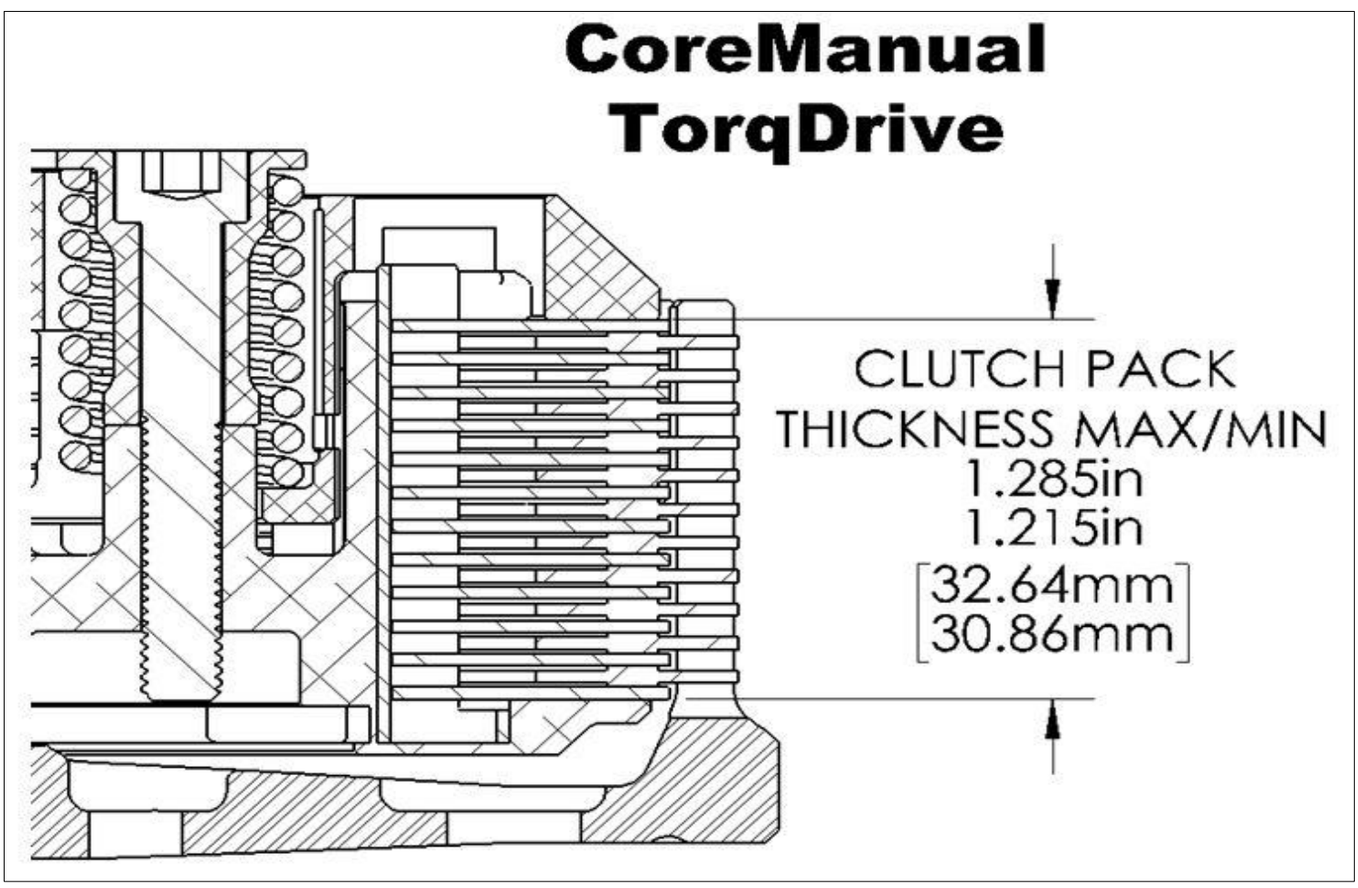

Clutch noise

Although it is harmless, some bike models may have “squeal” or “chatter” coming from the clutch at low RPM as it engages. Clutch squeal is caused by the clutch components vibrating as the clutch engages and can become more audible as the clutch gets hot. Adjusting the installed gap will NOT affect clutch squeal or chatter.

For bike models that have clutch squeal or chatter here are some recommendations to reduce or eliminate it:

- Change the oil: For optimal clutch performance Rekluse recommends using fresh, clean oil that meets JASO-MA oil rating requirements. Dirty or old oil can make the clutch more likely to squeal or chatter.

NEED ADDITIONAL HELP?

Website
www.rekluse.com/support

Frequently asked questions
www.rekluse.com/faq

Support Videos
www.rekluse.com/support/videos

Phone
(208) 426-0659

Technical Support
Contact Technical Support for questions related to product installation, tuning, and performance.

Hours:
Monday thru Friday: 8:00 a.m. - 5:00 p.m.
Mountain Time zone

Email: tech@rekluse.com

Customer Service
Contact Customer Service for additional product information, orders, and returns.

Hours:
Monday thru Friday: 8:00 a.m. - 5:00 p.m.
Mountain Time zone

Email: customerservice@rekluse.com

SETUP SHEET 198-7102022

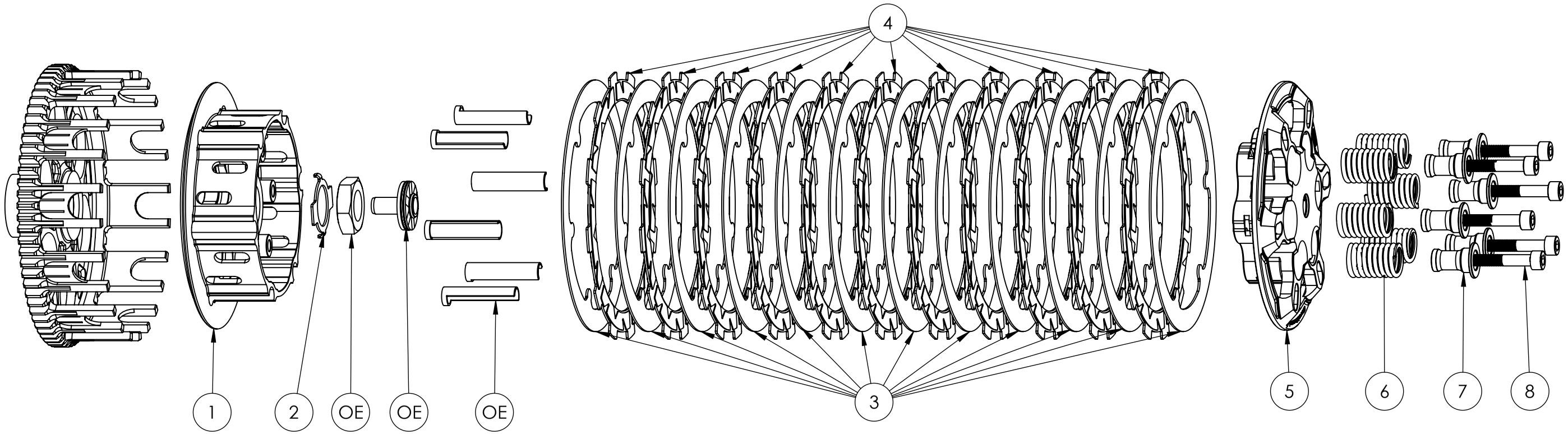

SERVICE LIMITS

COMPONENT	STANDARD	SERVICE LIMIT
TORQDRIVE FRICTION	.068-.072in 1.73-1.83mm	.065in 1.65mm

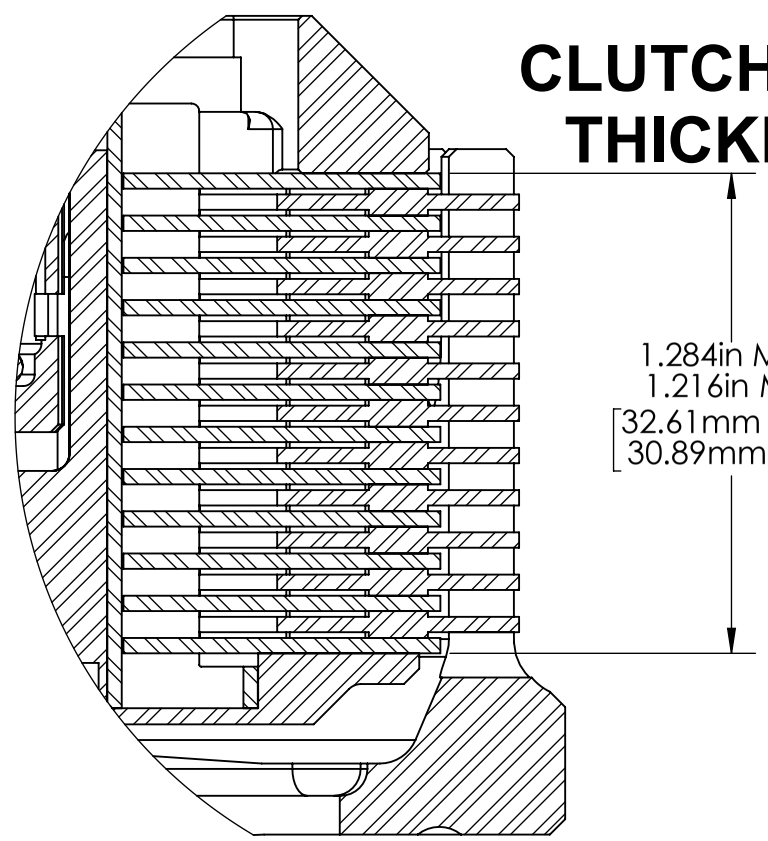

CLUTCH PACK THICKNESS

1.284in MAX
1.216in MIN
[32.61mm MAX
30.89mm MIN]

COMPONENTS

ITEM NO.	DESCRIPTION	QTY.
1	CENTER HUB	1
2	LOCK WASHER	1
3	DRIVE PLATE	12
4	TORQDRIVE FRICTION	11
5	PRESSURE PLATE	1
6	PRESSURE PLATE SPRINGS	6
7	SCREW SLEEVE	6
8	M6X40 SOCKET CAP SCREW	6
OE	OE COMPONENTS	VAR

REKLUSE MotorSports
12000 FRANKLIN RD
BOISE, IDAHO 83709
WWW.REKLUSE.COM
PH (208) 426-0659
FAX (208) 672-1318