Custom Dynamics® Saddlebag LED Latch Lightz™ Installation Instructions

We thank you for purchasing the Custom Dynamics® Saddlebag LED Latch Lightz™. Our products utilize the latest technology and high quality components to ensure you the most reliable service. We offer one of the best warranty programs in the industry and we back our products with excellent customer support, if you have questions before or during installation of this product please

Part Numbers: CD-SBL-BCM-RB
CD-SBL-BCM-RC
CD-SBL-BCM-SB
CD-SBL-BCM-SC

Package Contents:
- Saddle Bag LED Latch Lightz™ w/ Hinge Cover (2)
- BCM Y Harness Adapter w/ Plugs (1)
- Quick disconnect Harness (2)
- 4" Tie Wraps (10)
- Tie Wrap Holder (8)
- Foam Strip (2)

Fits: Functions Run/Brake/Turn on 2014-2021 Harley-Davidson® Street Glide (FLHX), Street Glide Special (FLHXS), Road Glide (FLTRX), Road Glide Special (FLTRXS), Road Glide Ultra (FLTRU), 2016 Road Glide Ultra CVO™ (FLTRUSE), Road Glide Limited (FLTRK), Ultra Classic (FLHTCU), Ultra Classic Low (FLHTCUL), Ultra Limited (FLHTK), Ultra Limited Low (FLHTKL), 2016-2021 Ultra Limited CVO™ (FLHTKSE) & Road King Special (FLHRS).

Functions as Run/Turn on 2014-2018 Electra Glide Police (FLHTP), 2014-2021 Road King Standard, 2014-2015 CVO™ Limited, 2015 CVO™ Road Glide Ultra, 2014 CVO™ Road King, 2015-2021 CVO™ Street Glide, 2018-2021 CVO™ Road Glide and 2019-2021 Electra Glide Standard. The BCM can be serviced by a Harley Davidson™ Technician to have Run/Brake/Turn function. Custom Dynamics® SMART Triple Play® is a simple plug and play alternative option for Run/Brake/Turn function.

Refer to page 3 & 4 for diagrams on alternative functions and wiring.

⚠ ATTENTION ⚠

Please read all Information below before Installation

Warning: Disconnect negative battery cable from battery; refer to owner's manual. Failure to do so may result in electrical shock, injury, or fire. Secure negative battery cable away from positive side of battery and all other positive voltage sources on vehicle.

Safety First: Always wear appropriate safety gear including safety glasses when performing any electrical work. It is highly recommended that safety glasses be worn throughout this installation process. Be sure vehicle is on level surface, secure and cool.

Important: This product is designed and intended for use as auxiliary lighting only. It is NOT intended to replace any original equipment lighting installed on the vehicle and should not be used for that purpose. This product must be wired so that it does not interfere with any original equipment lighting.

Important: Ambient install temperature must be 60 degrees F or higher. Allow 24 hours for tape to cure before washing or prolonged use of vehicle.

Note: The Y Harness Adapter must be plugged into the output (behind) any Smart Signal Stabilizer™/load equalizer or any brake strobe modules.

Note: The Y Harness Adapter must be plugged into the input (in front) of any run/brake/turn module.

Installation:

1. Secure motorcycle on level surface. Remove seat. Disconnect the negative battery cable from the battery.
2. Locate and unplug the lighting connector to the rear fender.
3. Plug the provided BCM Y Harness Adapter, in-line, into the rear lighting harness and into the bike's main wiring harness.
4. Open saddle bag lid and remove any personal items from the saddle bag.
5. With the saddle bag open, disconnect the check strap from the lid of the saddlebag. Save the hardware for reassembly. The saddlebag lid will need to remain fully open to the outside of the saddlebag. Take protective measures so the saddlebag and/or lid are not damaged during the rest of the installation.
6. Remove the hinge cover from the hinge and locking mechanism.
7. Install the Saddlebag LED Latch Lightz™ in place of the OEM hinge cover on the saddle bag hinge.
8. Reinstall the check strap to the Saddlebag Lid.
9. Install the provided foam strip on the top outside lip of the saddle bag as shown in Photo 1.
10. Route wire from Saddlebag LED Latch Lightz™ over the foam pad and around to the front of the saddle bag towards the locking latch. Secure the wire to the inside of the saddlebag using the provided tie wrap holders and tie wraps as shown in Photo 2. Clean the mounting location of the tie wrap holder with denatured alcohol before pressing into place.

Questions? Call us at: 1 (800) 382-1388 M-TH 8:30AM-5:30PM / FR 9:30AM-5:30PM EST

02/2022

Installation Continued:

11. Remove saddlebags from the motorcycle. Transfer the saddle bags to a protected work area to prevent scratches.
12. Using a grease pencil, mark desired drill point for the Saddlebag Latch Lightz™ wire to exit the saddle bag. It is recommended the drill hole is located approximately 1” below the saddle bag latch as shown in Photo 3. Apply masking tape to the outside of the saddlebag at the marked drill point.
13. Using a 9/16 drill bit, drill a hole through the marked drill hole on each saddlebag. Drill from the outside of the saddlebag to the inside then remove masking tape. It is recommended to start with a smaller drill bit and work up to a 9/16 drill bit.
14. Route wire from each Saddlebag LED Latch Lightz™ through the 9/16” hole and out the backside of the saddle bag. Install the grommet in the 9/16” hole in the Saddlebag.
15. Reinstall saddlebags and plug in the male JAE connectors from each Saddlebag LED Latch Lightz™ to the female JAE connectors (black) of the quick disconnect harness.
16. Plug the quick disconnect harness into the BCM Y Harness adapter.
17. Secure wires under the seat with tie wraps to secure wires from becoming cut, frayed, or pinched.
18. Reinstall motorcycle seat and connect the negative battery cable to the battery.
19. Test operation of all lighting before riding.

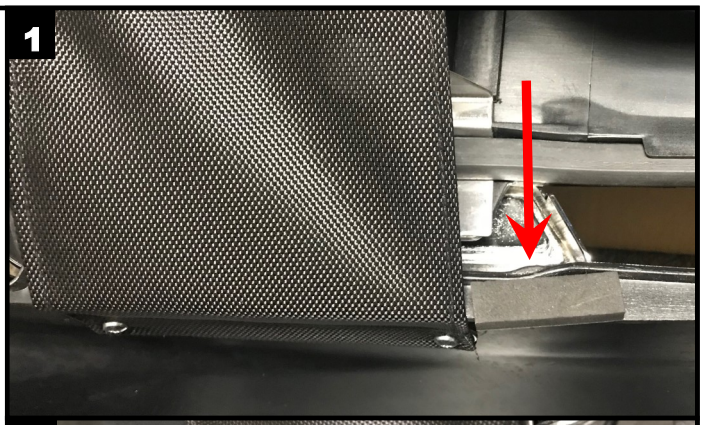

Installation Instructions - Page 3

Run-Brake Modification

For 2014 CVO™ Road King, 2015-2021 CVO™ Street Glide, 2018-2021 CVO™ Road Glide, 2014-2021 Road King® Standard, 2014-2015 Limited CVO™ & 2015 Road Glide Ultra CVO™

*Purple and Brown Wires going from the 3 Pin Connectors to the Y Harness must be cut and moved from the Purple and Brown to the Red Connections can easily be made using Posi-Tap™ connectors (*Sold Separately*)

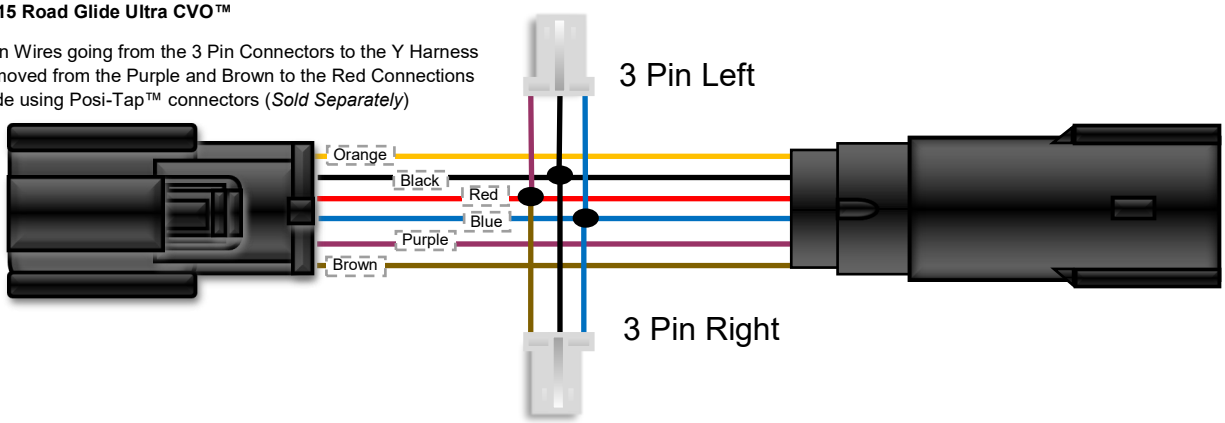

Run-Brake-Turn Modification

For 2014-2021 Road King® Standard, 2014-2015 Limited CVO™ & 2015 Road Glide Ultra CVO™ 2014 CVO™

Plug-N-Play with SMART Triple Play® accessory plugs

*SMART Triple Play® **with** accessory plugs required. The provided BCM Y harness **will not** be used. The two 3 pin connectors that extend from the output side of the Smart Triple Play® module allow for plug and play installation. Simply plug in the left side (purple) and right side (brown) female connectors from the Smart Triple Play® to the corresponding male connectors on the product.

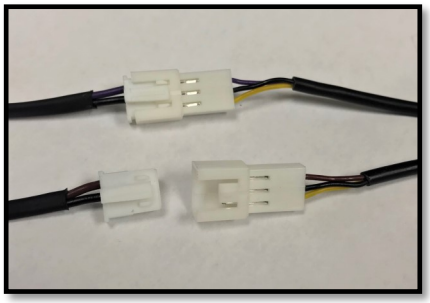

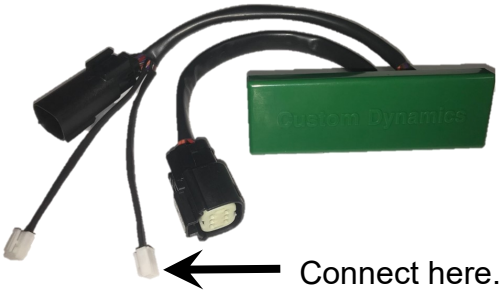

SMART Triple Play® without accessory plugs

*SMART Triple Play® **without** accessory plugs required. On the BCM Y Harness Adapter, the Blue wires going to both three pin connectors must be cut and capped off. BCM Y Harness Adapter must be installed on output side of SMART Triple Play®

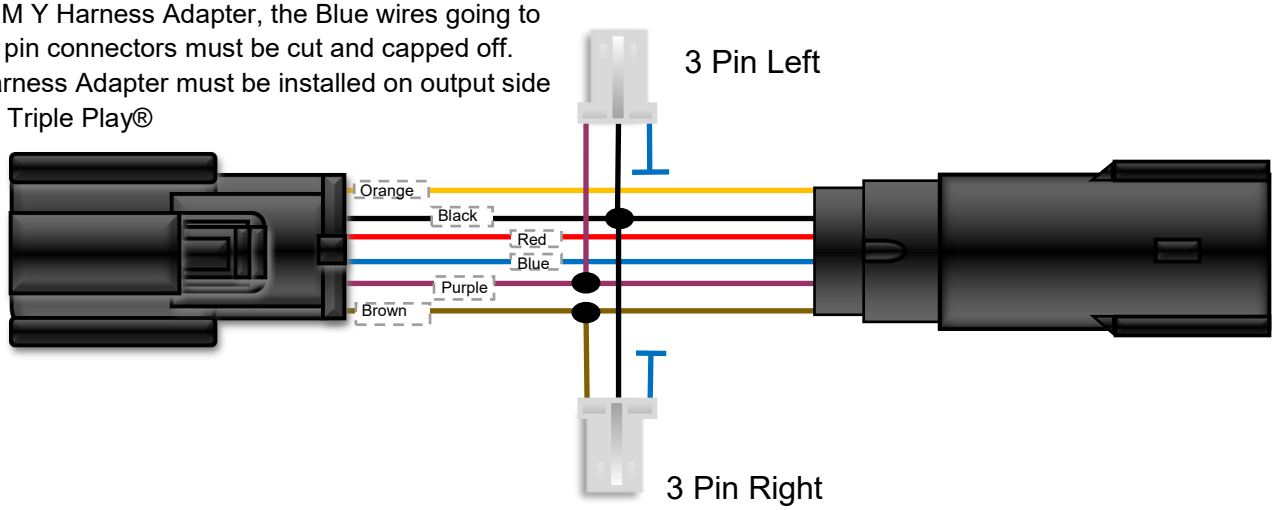

Questions? Call us at: 1 (800) 382-1388 M-TH 8:30AM-5:30PM / FR 9:30AM-5:30PM EST

Installation Instructions - Page 4.

Run-Brake-Turn modification with GEN-SMART-TPU-14CVO

2014 CVO™ Road King, 2015-2021 CVO™ Street Glide & 2018-2021 CVO™ Road Glide

NOTE 1:

Cut and remove the 3 pin plug from each LED Latch Lightz™ light to expose the black, yellow, and brown (right side) or purple (left side) wires. Cap off the yellow wire from each LED Latch Lightz™. Connect the pig-tail output wires from the Smart Triple Play® using the supplied Posi-Lock™ connectors to the exposed black and brown (right side) or (left side) purple wires on the Custom Dynamics® LED Latch Lightz™

NOTE 2:

Cut the license plate light harness and connect the Blue and Black wires with the Posi-Lock™ installed on the Smart Triple Play® to side of the license plate harness going to the license plate light. Cap off the other side of the license plate harness wires with heat shrink and tuck it into factory conduit.

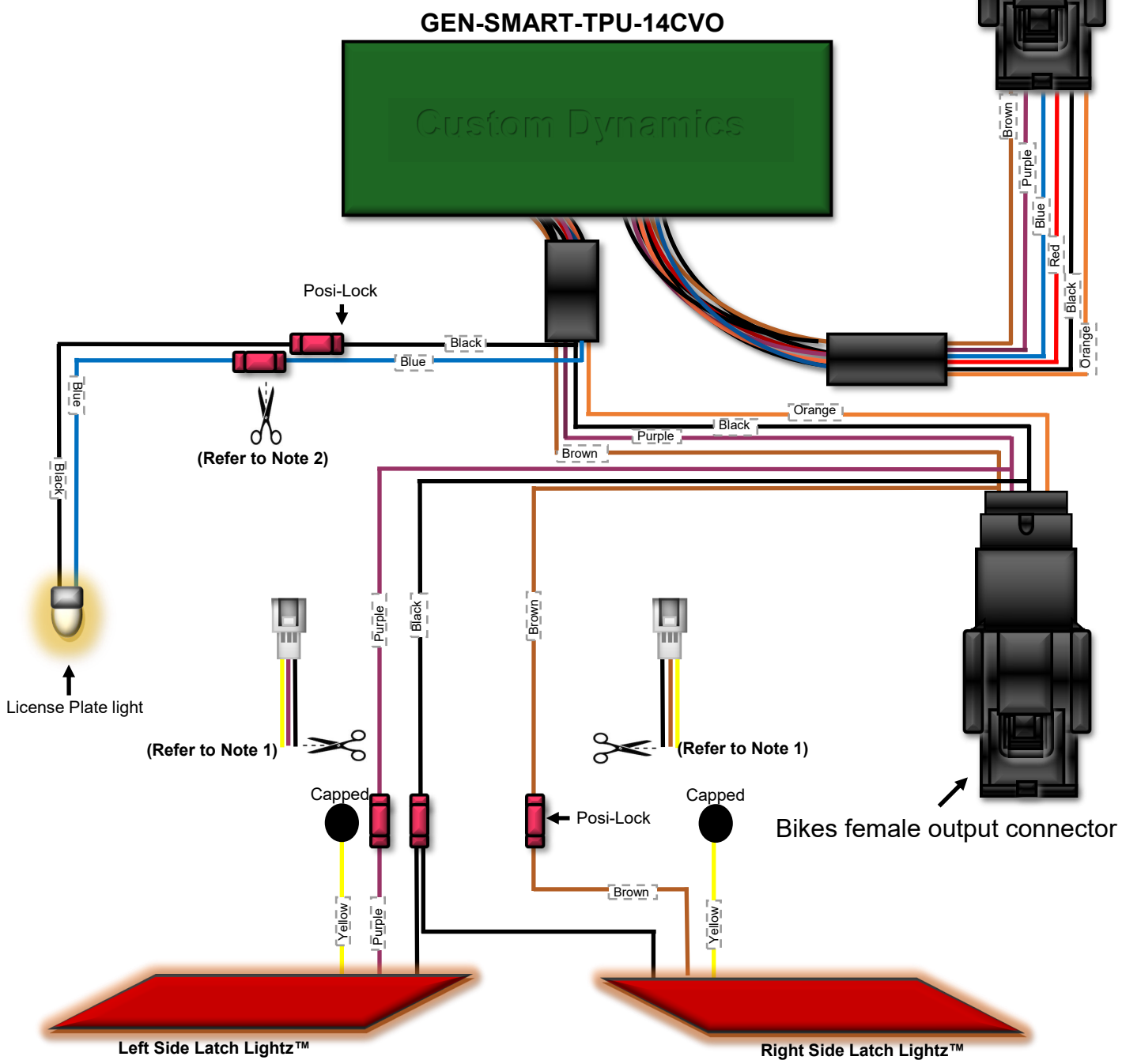

Questions? Call us at: 1 (800) 382-1388 M-TH 8:30AM-5:30PM / FR 9:30AM-5:30PM EST