YOSHIMURA
RESEARCH&DEVELOPMENT OF AMERICA, INC.
5420 DANIELS STREET STE A, CHINO CA 91710 · (800) 634-9166 · (909) 628-4722 · FAX (909) 591-2198
WWW.YOSHIMURA-RD.COM

Signature Series

Qualified Manufacturer Declared "Replacement Part"

2017 ~ 2020
Kawasaki KX250F
242930D320 (SS/AL)
RS-4 Stainless Steel Full-System

Signature Series systems are:
- CARB/EPA tail-pipe emissions compliant.
- Marked with appropriate EPA noise labels.
- Independent laboratory tested for EPA new vehicle noise compliance.

CAUTION: The muffler packing on this system MUST be replaced every 6-8 hours of use, or every 1-2 motos. Failure to follow recommended muffler re-packing interval can cause muffler damage and may void the warranty.

NOTE: IN THE STATE OF CALIFORNIA, IT IS ILLEGAL TO MODIFY THE EMISSION CONTROL SYSTEM, WHICH INCLUDES THE FUEL INJECTION OF ANY VEHICLE.

Caution: Exhaust system can be extremely hot. Let motorcycle cool down before beginning installation. Always wear hand and eye protection and take precautionary measures to avoid injury.

Note: Read through all instructions before beginning installation.

Tools Needed:

Metric Socket Set
Ratchet Wrench and Extension
Torque Wrench
Spring Puller Tool

Installation Steps:

1. Remove stock exhaust system.

   a. Remove right rear number plate (see Fig. 1).
   b. Loosen exhaust clamp and slide forward onto header. (See Fig. 2).
   c. Remove muffler mounting bolts and remove muffler. (See Fig. 2)
   d. Remove exhaust clamp from header.
   e. Remove header nuts and remove header.

2. Install Yoshimura exhaust system

   a. Inspect header manifold gasket. If damaged, replace with new gasket.
   b. Install Yoshimura header onto exhaust port using stock nuts. Do not tighten at this time.
   c. Insert rubber grommet into muffler mounting bracket.
   d. Insert aluminum spacer into rubber grommet.
      Note: Aluminum spacer is to rest between muffler and subframe. (See Fig. 3)
   e. Insert muffler/tailpipe assembly onto header outlet.
      Note: Yoshimura system does not retain stock gasket or exhaust clamp.
   f. Install Yoshimura Muffler using stock muffler mounting bolt and supplied washer. Orientation is as follows: Bolt, Washer, Rubber Grommet (Inside of muffler bracket), Aluminum Spacer, Subframe. Do not torque at this time.
   g. Install Yoshimura Tailpipe using stock bolt. Do not torque at this time.
   h. Install exhaust spring from muffler to tailpipe.
   i. Torque header nuts to 16.5 lb-ft (23 N-m).
   j. Torque tailpipe mounting bolt to 16.5 lb-ft (23 N-m).
   k. Torque muffler mounting bolt to 16.5 lb-ft (23 N-m).

Fig. 1

Fig. 2

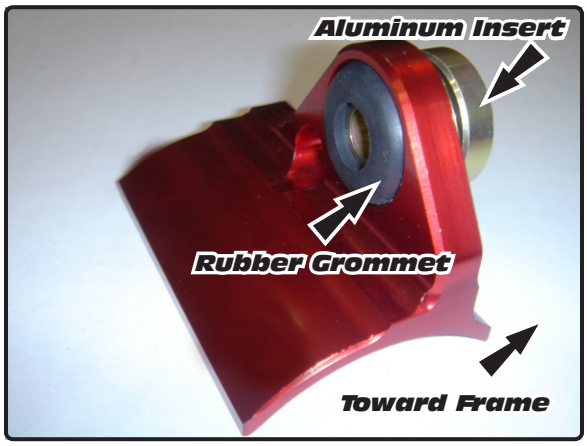

Fig. 3

3. It is recommended that the muffler and tailpipe be wiped down with rubbing alcohol to remove oil and fingerprints. This will help prevent tarnishing of the finish after the exhaust is heated up.

4. Before starting motorcycle, check for proper clearance between new exhaust system and rear suspension (i.e. tire, swingarm, brake, rear shock, etc). If any problem is found, please carefully repeat through the installation steps. If problem still persists, please call Yoshimura tech department at (800) 634-9166 / in CA (909) 628-4722.

5. Reinstall number plate using reverse steps of removal. Some trimming of the number plate may be necessary if it is hitting the muffler sleeve.

   NOTE: After starting motorcycle, it is normal for new exhaust system and muffler to emit smoke until oil residue burns off.

PN: 242920D320

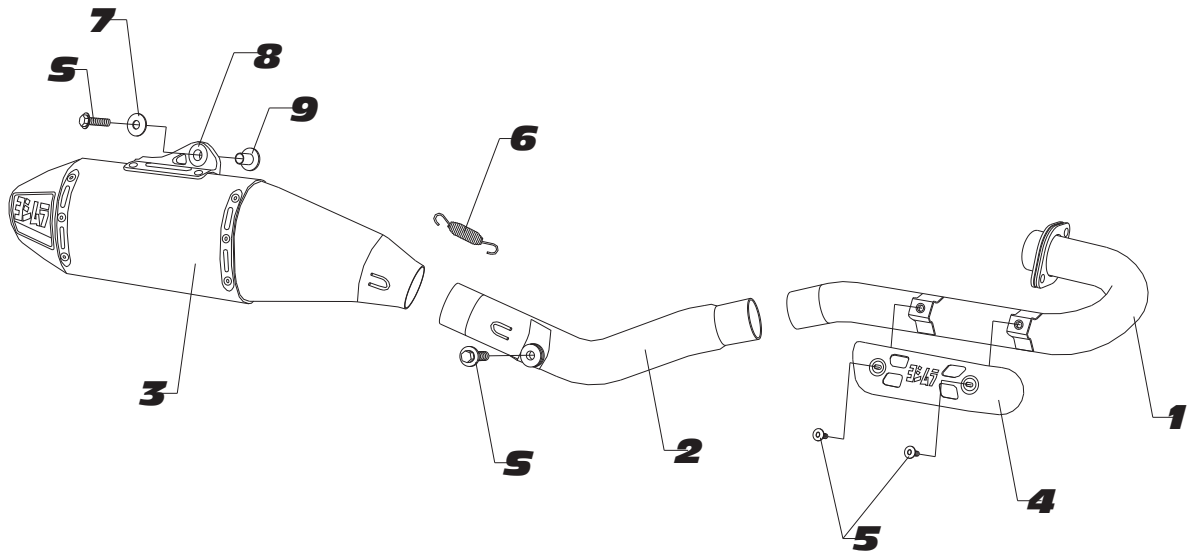

S = Stock

Parts Diagram

NO.	DESCRIPTION	QTY	PART #
1	Yoshimura Stainless Steel Header	1	24293-101
2	Yoshimura Stainless Steel Tailpipe	1	24293-152
3	Yoshimura RS4 Muffler w/ Aluminum Sleeve	1	242922D320-RMA
4	Yoshimura Header Heatshield	1	2180-HS
5	Header Heatshield Bolt	2	RC116HSB
6	Muffler Spring, Medium	1	RACE-SPS-1
7	8mm Flat Washer, Large	1	8MMWASHERL
8	Muffler Bracket Rubber Grommet	1	Z1022
9	Aluminum Insert	1	ALS-002
**	AMA 94dB Sound Insert (Installed)	1	INS-U-3
**	Yoshimura Vinyl Sticker	1	17029
**	Muffler Washer Plug	1	347PLUG
**	Instruction Manual	1	INST KIT
**	Muffler Spring Tool	1	ST-200
OPTIONAL REPLACEMENT PARTS			
****	Spark Arrestor Kit	SA-04-K	
****	Re-pack Kit	REPACK-RS4-PK11	

YOSHIMURA
RESEARCH&DEVELOPMENT OF AMERICA, INC.
5420 DANIELS STREET SUITE A, CHINO, CA 91710 · (800)634-9166 · (909)628-4722 · FACSIMILE (909)591-2198
www.yoshimura-rd.com

INS-22-K YOSHIMURA RS4 LOW VOLUME INSERT KIT

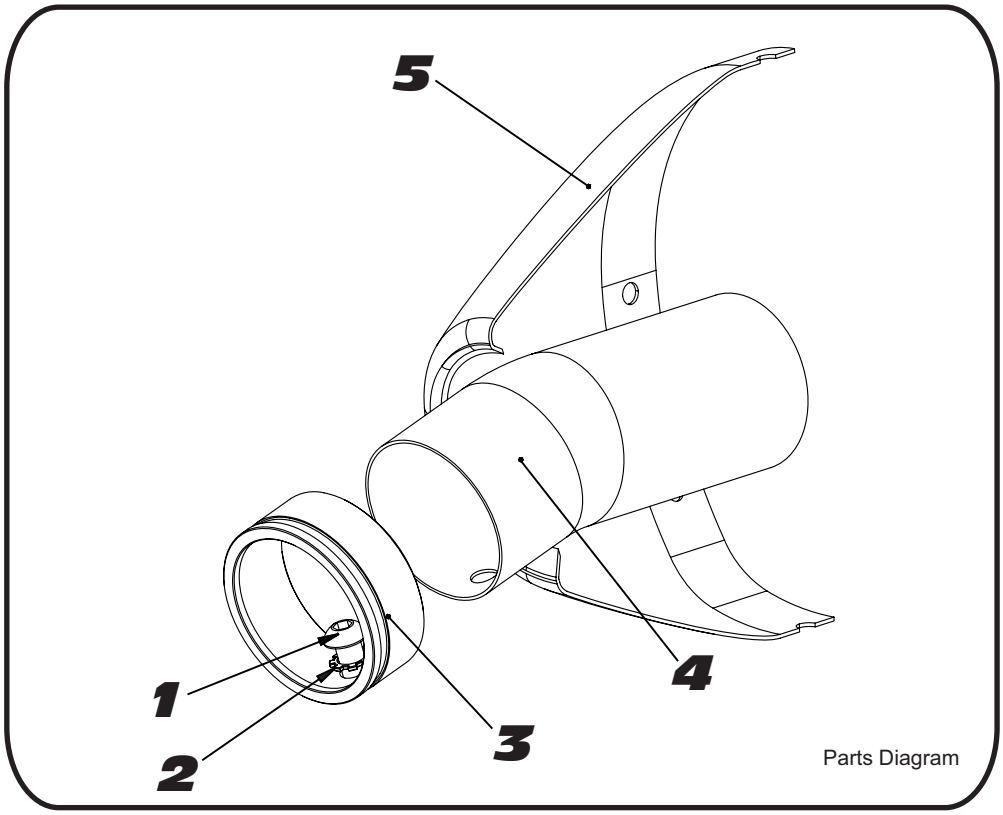

Parts Diagram

NO.	DESCRIPTION	QTY	PART #
1	6mm X 12mm Button Head Cap Screw	1	M6X12BHS
2	6mm Lock Washer	1	6MMLCKWSHR-TH
3	RS4 Aluminum Insert Ring	1	RS4-RING-1500
4	Low Volume Sound Insert	1	INS-U-3
5	Yoshimura Exhaust	**	**

1 *Using a 4mm Allen key, remove the bolt that secures the aluminum ring and sound insert to the muffler (see Parts Diagram for location).*

2 *Remove the sound insert from the muffler.*

3 *Inspect the sound insert for cracks or damage and replace if necessary.*

4 *Re-install sound insert and aluminum ring. Torque the sound insert securing bolt to 1.0 kg-m (7.3 lb-ft). NOTE: It is recommended that a low strength "Loc-tite" is used on the sound insert securing bolt.*