V3 FRAME SLIDERS KIT 2.0

SUZUKI SV 1000 S

year of production: ALL
product code: SR151

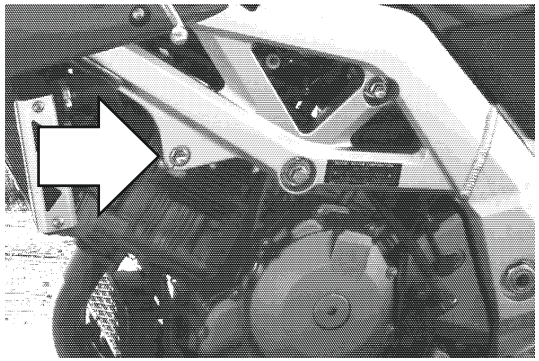

Assembly position
(left side)

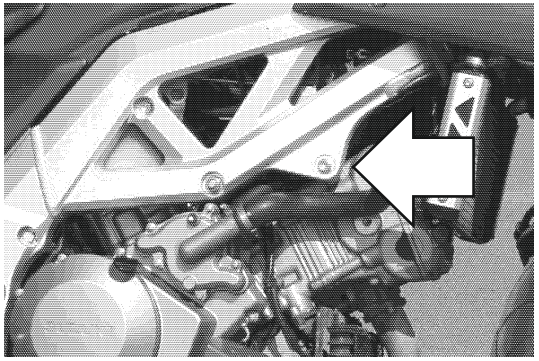

Assembly position
(right side)

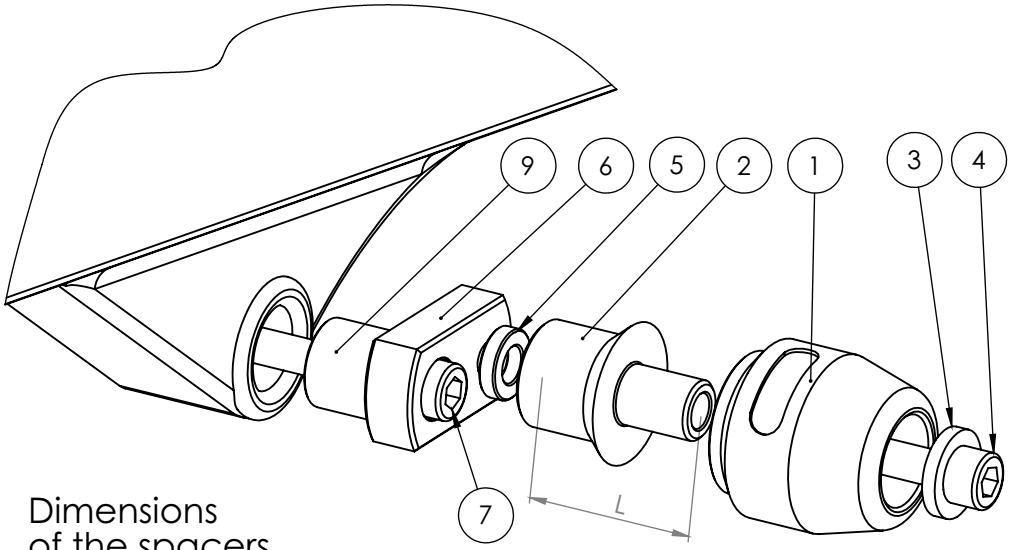

Dimensions
of the spacers

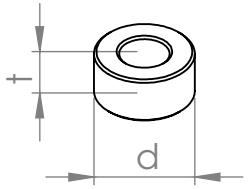

Assembly scheme (both sides)

Part #	Part name	Left side (as You sit on the motorbike)	Right side
1	Slider	1 pcs.	1 pcs.
2	Round cylindrical body	L = 50 mm	L = 50 mm
3	Steel sleeve	1 pcs.	1 pcs.
4	Allen bolt (8,8 class)	M10x80 mm	M10x80 mm
5	Spacer	t=20 mm, d=5 mm	t=20 mm, d=5 mm
6	Adapter	Aluminium	Aluminium
7	Mounting bolt 1	M10x1,25x120 (Hex)	M10x1,25x100 (Hex)
8	Mounting bolt 2	-	-
9	Spacer 1	t=20 mm, d=10 mm	t=20 mm, d= 10 mm
10	Spacer 2	-	-
11	Nut	-	-
12	Washer	-	-

Assembly instructions
1. Remove the original bolts indicated with the arrows on the assembly position scheme above.
2. Replace the original bolt by the new mounting bolt (parts #7), the spacer 1 (parts #9) and adapter (part #6) according to the scheme on the right page. Put the adapter (part #6) in the right position according to the drawing on the right page.
3. Assemble the slider, round cylindrical body, the bolt and the steel sleeve (parts #1, #2, #3 and #4) according to the drawing on the right page. Put them into the threaded hole in adapter (part #6).
4. Same operation is required in another side of the motorbike.
We suggest to use the threadlocker (eg. Loctite®) to make sure that the vibrations of the engine do not loosen the bolts.

Legal note. This product is a professional accessory to be used on the race track. Neither manufacturer, nor Seller take responsibility for any damages occurred despite of using protective accessories. For more information go to vortexracing.com