V3 FRAME SLIDER KIT 2.0

HONDA CB 1000 R

year of production: **ALL**

product code: SR113

Dimensions of the spacers

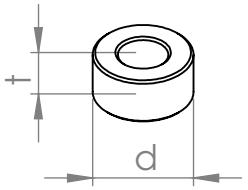

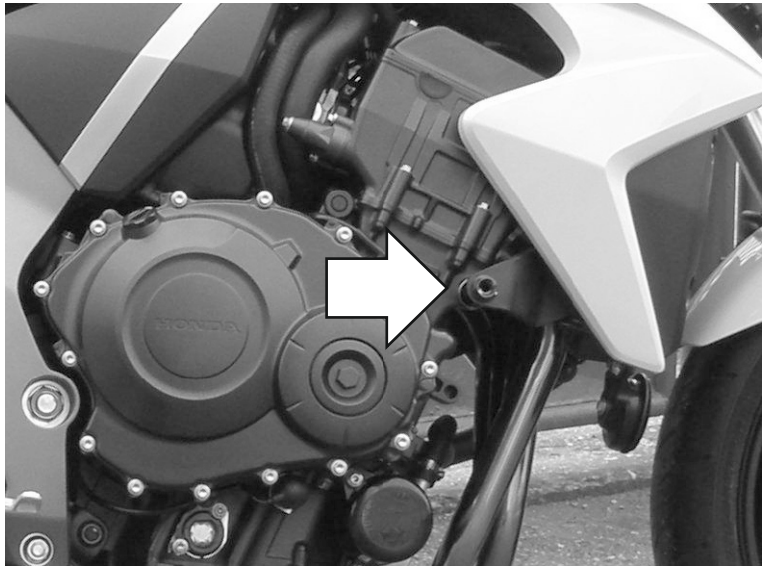

Assembly position (both sides)

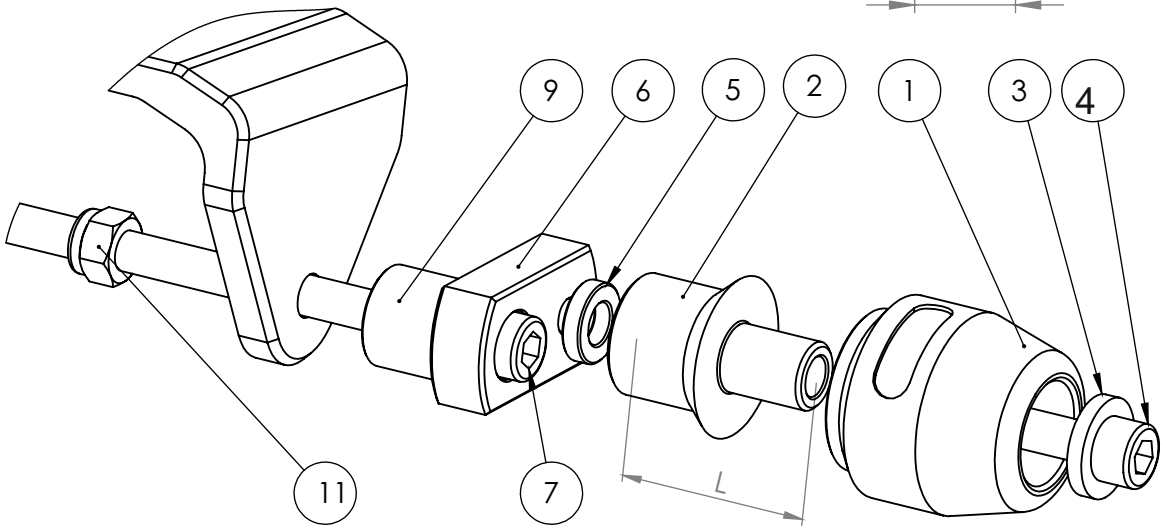

Assembly scheme (both sides)

Assembly instructions

1. Remove the original bolts indicated with the arrow on the assembly position scheme above.
2. Replace the original bolt by the new bolt (parts #7), the spacer 1 (parts #9) and adapter (part #6) according to the scheme on the right page. Put the adapter (part #6) in the right position according to the drawing on the right page.
3. Assemble the slider, round cylindrical body, the bolt and the steel sleeve (parts #1, #2, #3 and #4) according to the drawing on the right page. Put them into the threaded hole in adapter (part #6).
4. Same operation is required in another side of the motorbike.

We suggest to use the threadlocker (eg. Loctite) to make sure that the vibrations of the engine do not loosen the bolts.

Legal note. This product is a professional accessory to be used on the race track. Neither manufacturer, nor Seller take responsibility for any damages occurred despite of using protective accessories. For more information go to vortexracing.com

Part #	Part name	Left side (as You sit on the motorbike)	Right side
1	Slider	1 pcs.	1 pcs.
2	Round cylindrical body	40 mm	40 mm
3	Steel sleeve	1 pcs.	1 pcs.
4	Allen bolt (8,8 class)	M10x55 mm	M10x55 mm
5	Spacer	-	-
6	Adapter	Aluminium	Aluminium
7	Mounting bolt 1	M12x1,25x80 mm	M12x1,25x80 mm
8	Mounting bolt 2	-	-
9	Spacer 1	t=20mm, d=5 mm	t=20mm, d=5 mm
10	Spacer 2	-	-
11	Nut	-	-
12	Washer	-	-