V3 FRAME SLIDERS KIT 2.0

APRILIA TUONO V4R APRC

year of production: ALL

product code: SR222

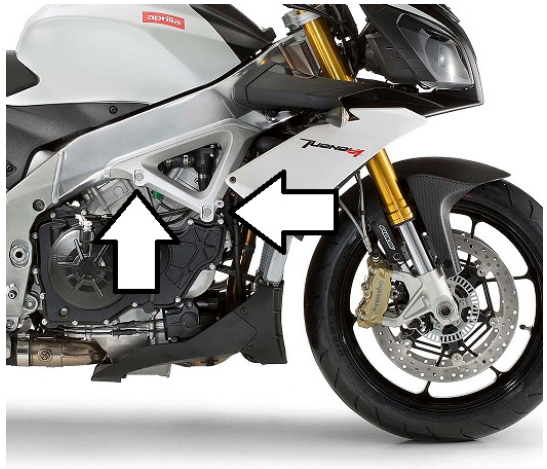

Assembly positions.
Left and right sides

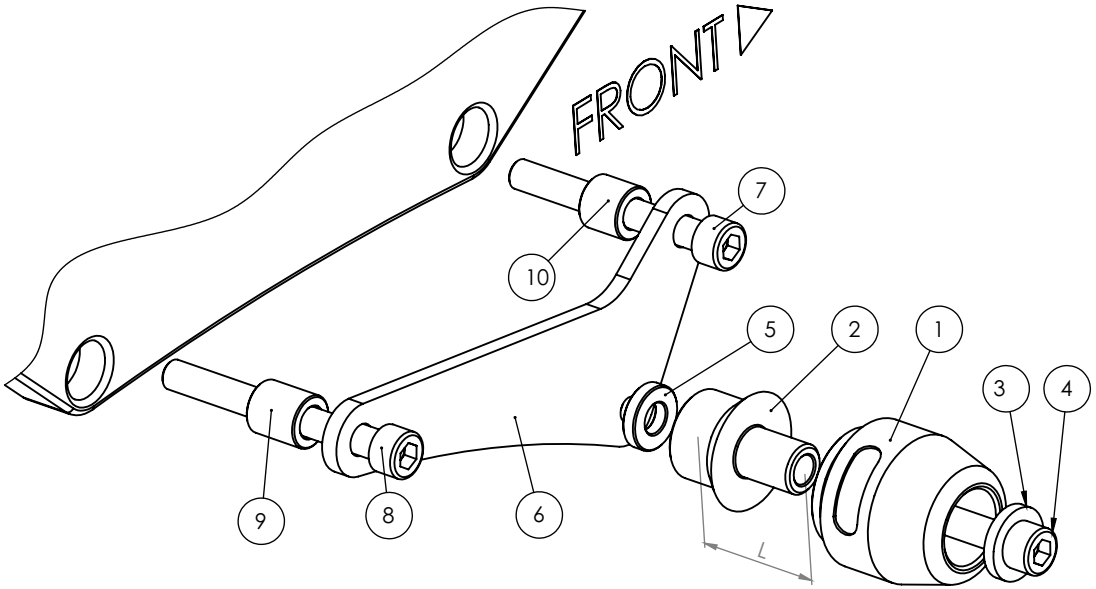

Assembly scheme (both sides)

Dimensions
of the spacers

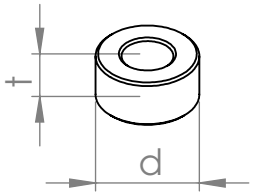

Assembly instructions

1. Remove the fairings on both sides.
2. Please check the assembly positions on the image above. Remove the original bolts indicated with the arrow on the image obove.
3. Replace the original bolts with the new mounting bolts (parts #7, #8), spacers (parts #9, #10) and metal adapters (parts #6) and put these parts in the right order shown on the assembly scheme on the right page. Put the adapters (parts #6) in the right positions according to the assembly scheme.
4. Please assemble the fairings.
7. Assemble the sliders, round cylindrical body, the bolts, steel sleeve and the spacers (parts #1, #2, #3, #4 and #5) according to the drawing on the right page. Put them into the threaded holes in the adapter (part #6).

We suggest to use the threadlocker (eg. Loctite®) to make sure that the vibrations of the engine do not loosen the bolts.

Part #	Part name	Left side (as You sit on the motorbike)	Right side
1	Slider	1 pcs.	1 pcs.
2	Round cylindrical body	L = 45 mm	L = 40 mm
3	Steel sleeve	1 pcs.	1 pcs.
4	Allen bolt (8,8 class)	M10x65 mm	M10x 60 mm
5	Spacer	t = 20 mm, d = 5 mm	t = 20 mm, d = 5 mm
6	Adapter	Steel	Steel
7	Mounting bolt 1	M10x70	M10x90
8	Mounting bolt 2	M10x70	M10x90
9	Spacer 1	t = 18 mm, d = 15 mm + M10 Washer	t = 18 mm, d = 15 mm + M10 Washer
10	Spacer 2	t = 18 mm, d = 15 mm + M10 Washer	t = 18 mm, d = 20 mm
11	Nut	-	-
12	Washer	-	-

Legal note. This product is a professional accessory to be used on the race track. Neither manufacturer, nor Seller take responsibility for any damages occurred despite of using protective accessories. For more information go to vortexracing.com