YOSHIMURA
RESEARCH&DEVELOPMENT OF AMERICA, INC.
5420 DANIELS STREET STE A, CHINO CA. 91786 · (800)634-9166 · (909)628-4722 · FACSIMILE (909)591-2198
www.yoshimura-rd.com

RS2 "MINI" PERFORMANCE EXHAUST SYSTEM

Kawasaki/Suzuki
2002-2014 KLX110
2010-2014 KLX110L
2003-2005 DRZ110

2430522	*MINI RS2 STAINLESS STEEL FULL SYSTEM W/ CARBON FIBER SLEEVE*

THIS PRODUCT IS DESIGNED FOR USE IN CLOSED COURSE RACING AND IS NOT INTENDED FOR ANY OTHER USE.

CAUTION: The muffler packing on this system MUST be replaced every 6-8 hours of use, or after each moto. Failure to follow recommended muffler re-packing interval can cause muffler damage and may void the warranty.

NOTE: IN THE STATE OF CALIFORNIA, IT IS ILLEGAL TO MODIFY THE EMISSION CONTROL SYSTEM, WHICH INCLUDES THE CARBURETORS OF ANY VEHICLE.

NOTE: READ ALL INSTRUCTIONS PRIOR TO BEGINNING INSTALLATION

Caution: Exhaust system can be extremely hot. Let motorcycle cool down before beginning installation. Always wear hand and eye protection and take precautionary measures to avoid injury.

Tools Needed:

Metric Socket Set
5mm Allen Socket
Ratchet and Extension
Torque Wrench

Installation Steps:

1 Remove right number plate.

2 Remove stock exhaust system and exhaust port gasket.

3 Install new stock exhaust port gasket (not supplied). PN: 11061-1112

4 Install rubber grommet and aluminum insert into Yoshimura muffler bracket.

5 Install Yoshimura header/tailpipe with muffler assembly. Install supplied header nuts loosely, then install supplied muffler mount bolt and washer.

6 Torque header nuts and muffler mounting bolt to 2.0 kg-m (14.6 lb-ft).

7 Install Yoshimura heat shield to header with supplied bolts.

8 It is recommended that the muffler and tailpipe be wiped down with rubbing alcohol to remove oil and fingerprints. This will help prevent tarnishing of the finish after the exhaust is heated up.

9 Reinstall right number plate.
Note: For 2002-2009 models, install 6mmX3mm spacers between the right number plate and the chassis at the two mounting points.

10 Check for proper clearance between new exhaust system and rear suspension (i.e. tire, swing-arm, brake, number plate etc). If any problem is found, please carefully follow through the installation steps again. If problem still persists, please call Yoshimura technical department at (800)634-9166 / in CA (909) 628-4722.

NOTE: After starting motorcycle, it is normal for new exhaust system and muffler to emit smoke until oil residue burns off.

Fig. 1

Fig. 2

#2430522

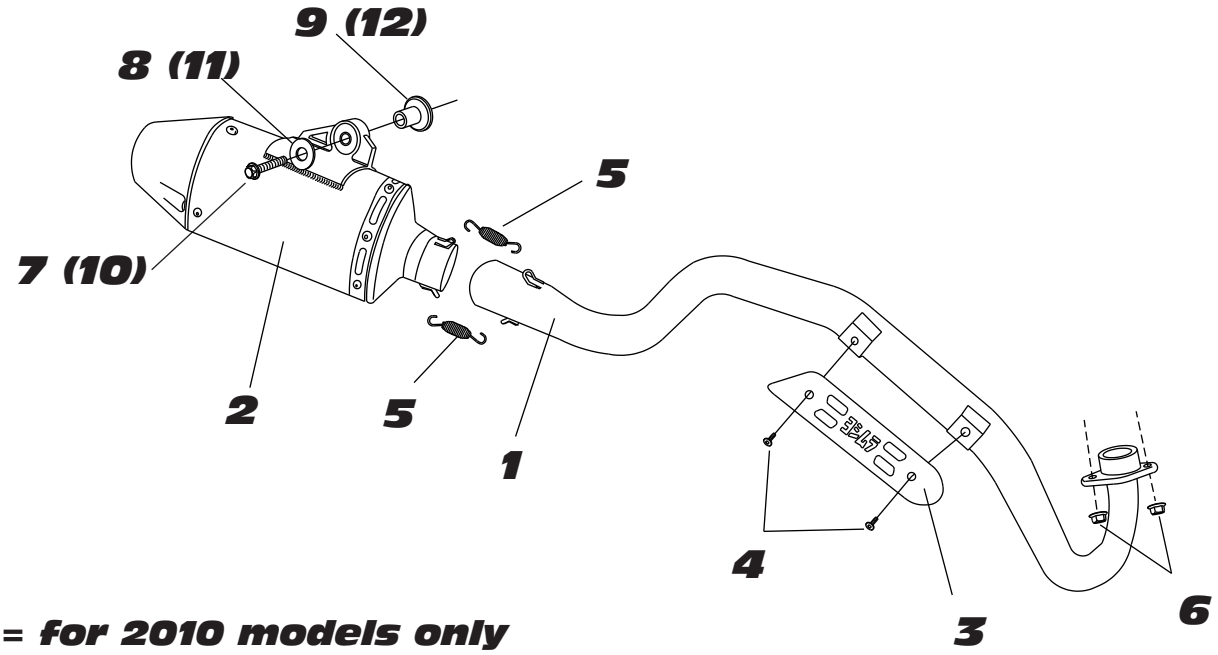

() = for 2010 models only

Parts Diagram

NO.	DESCRIPTION	QTY	PART #
1	Yoshimura Header & Tailpipe Stainless Steel Competition	1	2430-101-A
2	Yoshimura Carbon Fiber Muffler	1	2430512-RMA
3	Yoshimura Heat Shield	1	2205-HS
4	Heat Shield Bolts	2	RC116HSB
5	Springs	2	RACE-SPX-1
6	8mm C-Nut	2	8MMCNUT
7	6mm X 40mm Socket Head Cap Screw	1	M6X40
8	Large 6mm Washer	1	6MMWASHERL
9	Aluminum Insert for Rubber Grommet	1	ALS-007
10	8mm X 55mm Socket Head Cap Screw	1	M8X55
11	Large 8mm Washer	1	8MMWASHERL
12	Aluminum Insert for Rubber Grommet	1	ALS-010
**	6.5mmX3.5mmX15.5mm Aluminum Spacer	2	6X3SPCC
**	Spring Puller Tool	1	ST-200
**	Offroad Endcap Plug	1	347PLUG
**	Aluminum Bracket Rubber Grommet	1	Z1022
**	Yoshimura Vinyl Sticker	1	17029

YOSHIMURA
RESEARCH&DEVELOPMENT OF AMERICA, INC.
5420 DANIELS STREET STE A, CHINO CA. 91710 · (800)634-9166 · (909)628-4722 · FACSIMILE (909)591-2198
www.yoshimura-rd.com

TEC-MDS4 Spark Arrester Cleaning Information

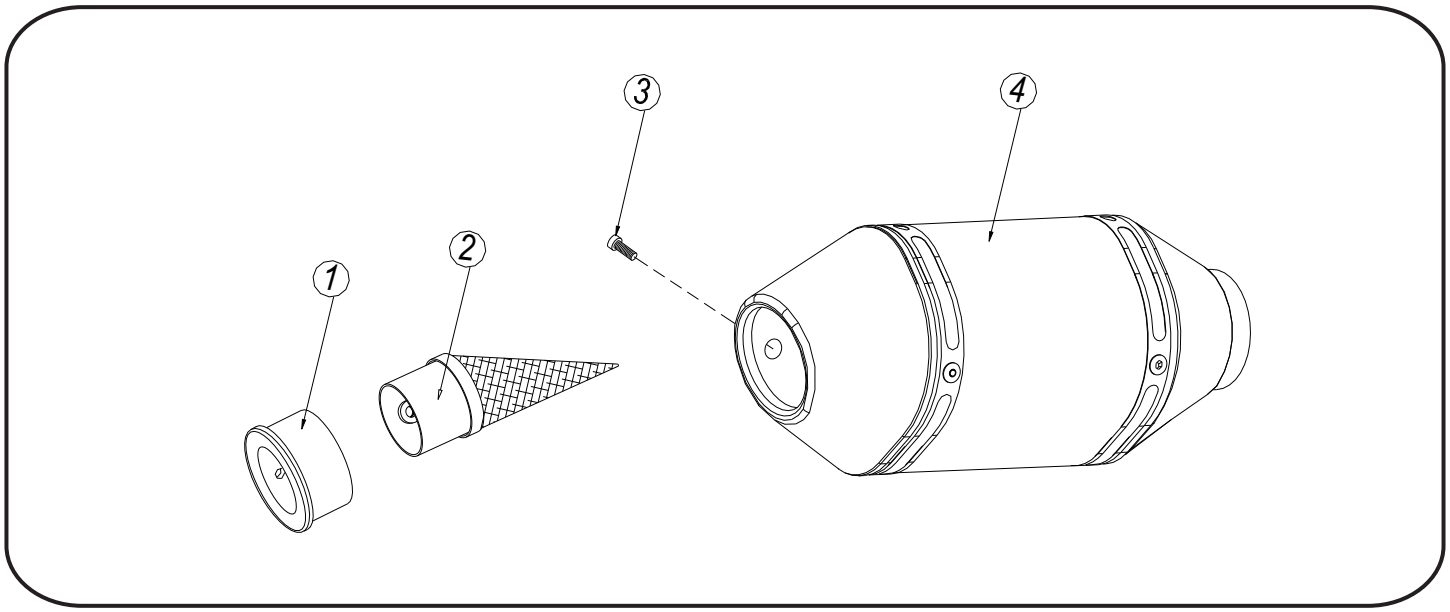

Parts Diagram

NO.	DESCRIPTION	QTY
1	Aluminum Ring	1
2	Spark Arrester	1
3	Spark Arrester Securing Bolt	1
4	Muffler Assembly	1

Caution: Muffler can be extremely hot. Let muffler cool down before removing spark arrester.

Note: Read through all instructions before beginning disassembly.

Tools Needed:

4 mm Allen Key
Wire Brush
Pair of Gloves
Safety Glasses

Cleaning Steps:

1 *Using a 4mm Allen key, remove the bolt that secures the aluminum ring and spark arrester to the muffler (see Parts Diagram for location).*

2 *Remove the spark arrester from the muffler.*

3 *Using a wire brush, remove carbon deposits from spark arrester screen. Inspect the screen for excessive wear or damage. If spark arrester is excessively worn or damaged, the spark arrester must be replaced. Cleaning and inspection should be performed after every 60 hours of use.*

CAUTION: Gloves and safety glasses should be worn while cleaning spark arrester.

4 *Re-install spark arrester and aluminum ring. Torque the spark arrester securing bolt to 1.0 kg-m (7.3 lb-ft).*

NOTE: It is recommended that a low strength, high temperature thread-lock is used on the spark arrester securing bolt.