IN05-0645 rev.01/13A

WOODCRAFT CFMOTORSPORTS
105 Baldwinville Rd
Winchendon, MA 01475
(978) 297-2977

Ducati 1199 Rearset Instruction Sheet – Racing Use Only

Thank you for selecting CFMotorsports rearsets. The components you have just purchased for your motorcycle are designed to improve the ground clearance, crash worthiness and overall good looks of your motorcycle. Please note that these components are intended and approved for **racing use only**. As such, the footpegs are solid-mount and provisions for brake light switches and brake pedal return springs are generally not provided.

1) Remove stock rearsets, footpegs and associated hardware. All components that are re-used in this kit should be cleaned and inspected for damage before re-installation.

IMPORTANT

Tighten all fasteners to factory specification or industry standard. FAILURE TO PROPERLY TIGHTEN ALL FASTENERS MAY CAUSE DAMAGE TO THE MOTORCYCLE, LOSS OF CONTROL AND SERIOUS INJURY OR DEATH

ITEM NO.	PART NUMBER	QTY.
1	05-0645R	1
2	05-0645RI	1
3	05-0645MC	1
4	05-0640RHG	1
5	04-SC820Z	2
6	04-BH616 S/S	2
7	04-BH625 S/S	4
8	04-BH620 S/S	1
9	05-0645OSP	1
10	09-0645P	1
11	09-4145	1
12	06-4801	1
13	04-FH620Z	3
14	04-FH1030Z	1
15	04-LN6	2
16	OEM Oring	2
17	08-4899	1
18	OEM Brake Bolt	1

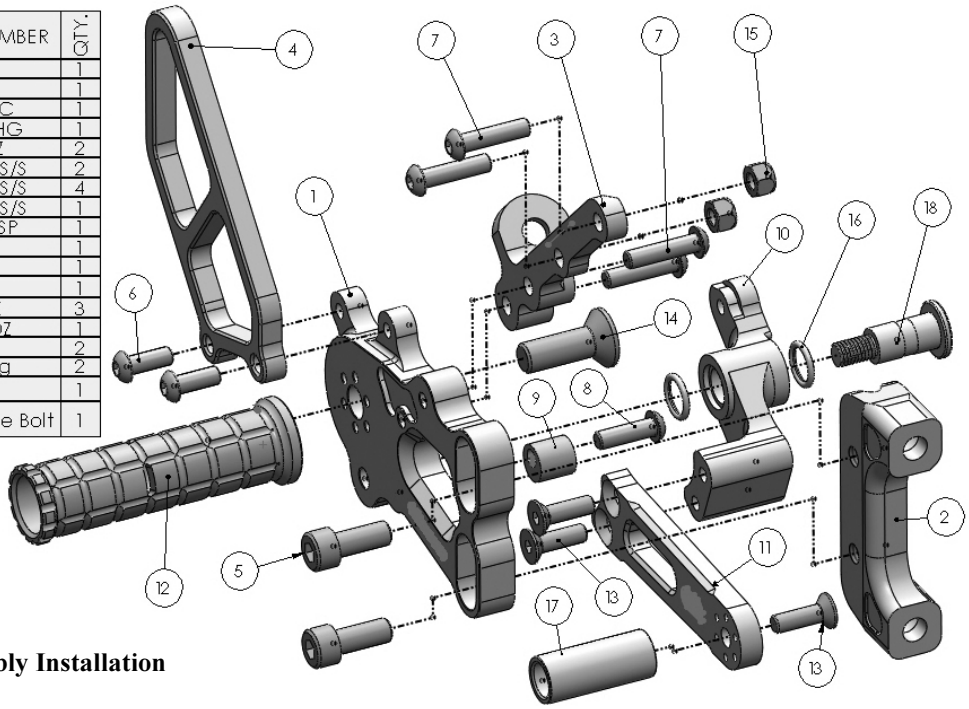

Brake Side Assembly Installation

1) Assemble the brake pedal before installation **using LOCTITE** on all main bolts (13). Bolt the CFM brake pedal to the back side of the bracket using all of the OEM hardware (18) and o-rings (16). Be sure to use quality waterproof grease on the sliding surface of the brake pedal, and **use BLUE LOCTITE** on the threads of the OEM bolt.
2) Bolt the inner bracket (2) to the frame using the OEM hardware.
3) Assemble the main bracket (1) by attaching the heel guard (4), master cylinder mount (3) and brake stop spacer (9). The brake stop spacer will need to be re-adjusted once the master cylinder is installed.
4) Bolt the CFM footpeg (12) to the bracket (1) using the included 10mm hardware (14). Note that the footpeg has a 6-position eccentric adjustment and that the pegs on both sides of the motorcycle must be placed in the same location. Test different peg locations and main bracket heights until you find a comfortable position. **IMPORTANT - Secure footpeg bolt with LOCTITE for final assembly.**
5) Bolt the OEM master cylinder and return spring to the MC bracket (3) using the supplied bolts (7) and nuts (15). Attach the master cylinder to the brake pedal. Adjust the eccentric spacer (9) so that there is at least a few millimeters of play in the brake pedal when it is not being applied. Orient the spacer so that the pressure from the brake pedal pushes in the clockwise direction. See picture to the right.
6) Bolt the brake bracket assembly (1) to the inner bracket (2) using the included hardware (5).
7) Adjust the brake pedal to your desired height using the eccentric tip (17). **IMPORTANT - Secure the toe peg bolt (13) with Loctite for final assembly.**

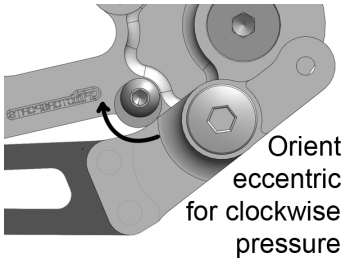

IN05

Shifter Side Assembly Installation

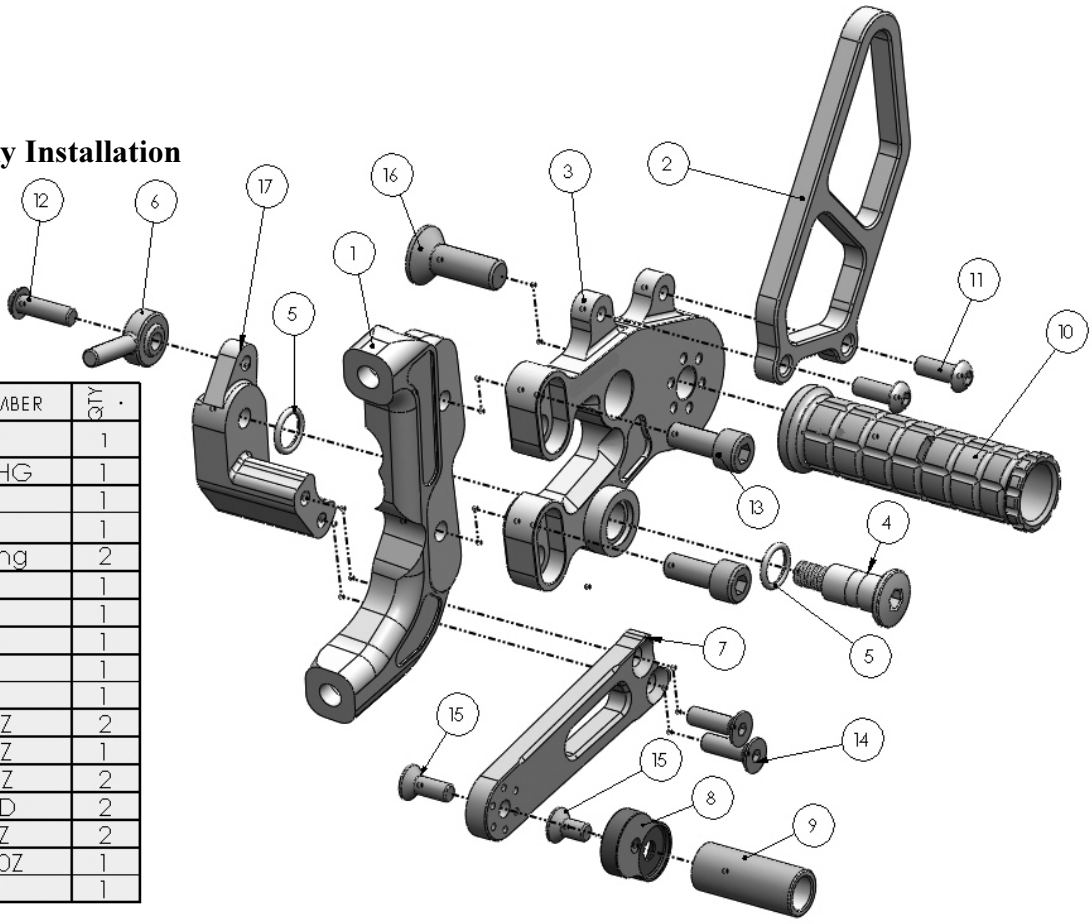

ITEM NO.	PART NUMBER	QTY
1	05-0645LI	1
2	05-0640LHG	1
3	05-0645L	1
4	OEM Bolt	1
5	OEM Oring	2
6	08-6MRH	1
7	08-4145	1
8	08-7099E	1
9	08-4099	1
10	06-4801	1
11	04-BH616Z	2
12	04-BH620Z	1
13	04-SC820Z	2
14	04-FH620D	2
15	04-FH614Z	2
16	04-FH1030Z	1
17	08-0645P	1

1) Assemble the shift pedal before installation using **LOCTITE** on the main shaft bolts (14). The heim joint (6) and pedal tip (9) are assembled later.
2) Bolt the inner bracket (1) to the frame using the OEM hardware.
3) Assemble the main bracket (3) by attaching the heel guard (2) and footpeg in the same location as the brake side. **IMPORTANT - Secure the bolts with LOCTITE.**
4) Thread the CFM shift pedal on to the OEM shift rod. This requires the shift pedal to be oriented as per the picture at the right. The heim joint should be threaded in until the top of the shift pedal is perpendicular to the main shift rod. You will need to lightly bolt the shifter to the main bracket using the OEM bolt (4) a few times to double check and get this right. **IMPORTANT - Secure the bolt (12) with LOCTITE**
5) Bolt the shift pedal (17) to the bracket using the OEM bolt (4) and o-rings (5). Be sure to generously apply quality waterproof grease to the sliding surface of the footpeg to ensure smooth lever operation. **IMPORTANT - Secure the bolt (4) with LOCTITE.**
6) Adjust the pedal height for comfort using the eccentric adjuster (8). If using the optional folding toe peg, be sure to orient the folding toe peg so that it always folds directly backwards. **IMPORTANT - Secure the bolt (15) and bolt (16) with LOCTITE** for final assembly**.**

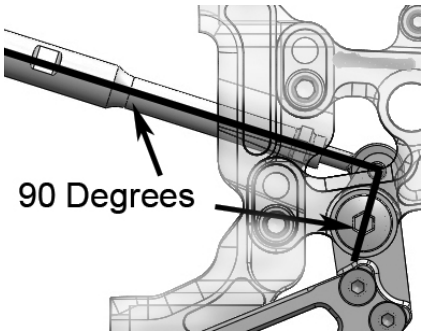

BE SURE THAT ALL COMPONENTS OPERATE AND RETURN FREELY BEFORE USE

If you have any questions regarding installation, please feel free to contact us.

IMPORTANT

Installation and use of this product will change the response of the motorcycle to rider control inputs. Failure of the rider to adapt to these changes may result in a loss of control, and serious injury or death. Improper installation and/or failure to comply with all warnings and instructions may cause a loss of control and serious injury or death. DO NOT INSTALL OR USE THIS PRODUCT IF YOU ARE UNABLE TO DO SO IN COMPLIANCE WITH ALL INSTRUCTIONS AND WARNINGS. SEEK THE ASSISTANCE OF A TRAINED PROFESSIONAL TECHNICIAN. Installation of this product releases the Woodcraft Technologies, Inc. from all liabilities as to the use of this product. The user recognizes that any alteration or modification to any motorcycle may increase the risk of injury or accident and may also render the motorcycle illegal for public road use